SplashDrone 4+

User Manual



SwellPro

Visit support.swellpro.com for the latest version of this manual and firmware updates for your drone and accessories.

SplashDrone 4+

Model：SD4+

V1.0.3 – 2026.03

Thank You

Thank you for purchasing the SplashDrone 4+. We have designed and manufactured it to the highest quality standards.

It is important to familiarize yourself with the features of this unique aircraft by carefully studying this manual and particularly the priority sections indicated in the Table of Contents. **After operating in saltwater or polluted water, the aircraft must be rinsed thoroughly with fresh water immediately, prior to the drying of salt and sediment on its components.**

Visit www.swellpro.com/pages/support-center for the latest manuals, software, and tips. Refer to the Version Information section at the end of this manual, which details additions and corrections.

Copyright

Swellpro Co., Ltd, copyrights this manual with all rights reserved. Without prior written authorization from the company, no person (or entity) may copy, scan, store, distribute, reproduce,sell, transfer, or modify any part or all of this manual in any form for personal use or use by others.Users should refer only to this manual and its contents for instructions on operating this product. This manual should not be used for any purpose other than its intended use.

Using Manual

Swellpro copyrights this document, and all rights are reserved. Unless otherwise authorized by Swellpro, you are not eligible to use or allow others to use the document or any part of the document by reproducing or transferring it. Users should refer only to this document and its content for instructions on operating the Swellpro UAV. The document should not be used for any purpose other than its intended use.

This document is designed to be printed or viewed on a computer or mobile device. You can search directly for terms like "Propeller" to find references if used electronically. Additionally, you can click on any topic in the Table of Contents to navigate directly to that topic.

Swellpro provides users with tutorial videos and the following documents:

- User Manual
- Quick Start Guide

It is recommended that you watch all tutorial videos. Prepare for your first flight by reviewing the Quick Start Guide and referring to this User Manual for more information.

Legend

⚠ Important Hints And Tips Reference

Disclaimer and Warning

To ensure the safe and successful operation of this product, please read and fully understand all user documents listed above, and strictly follow the operating instructions and steps described in this manual. Store the aircraft and its accessories out of the reach of children and pets. If you do not abide by the Safety Operation Guidelines, Swellpro shall not be responsible for any product damage or personal or property loss during use, and shall not provide any warranty service. Never modify the product with any incompatible components or in any way that does not conform to Swellpro's official instructions. Please make sure that the operations you perform do not endanger the personal or property safety of yourself or those around you. By using this product, you agree that you have read and accepted all terms related to it. You undertake to be responsible for your own actions and all consequences arising therefrom. You undertake to use this product only for legitimate purposes and agree to these terms and any relevant policies or guidelines that Swellpro may establish.

SwellPro is exempt from the user's liabilities for damage(s) to person/s or property, or injuries incurred directly or indirectly from the use of this product in the following conditions:

- Damage or injuries incurred when the user/s are under the influence of alcohol, drugs, or medication.
- Any malfunction caused by operators' failure to follow the guidance of the manual to assemble and set up or operate the aircraft as described and designed.
- Damage or injuries may occur due to failure to study the tutorial videos and the user manual before flying the aircraft.
- Damage or injuries incurred as a result of the use or installation of any unauthorized third-party accessories or counterfeit parts, which were not provided or approved by SwellPro.
- Damage or injuries as a result of flying the aircraft out of eyesight range, or more than 300m away from the controller.
- Damage or injuries caused by flying the aircraft in areas of magnetic fields & radio interference.
- Damage or injuries caused by flying in a NO-FLY ZONE that is regulated by local laws & rules.

 ©2026 SwellPro All Rights Reserved

- Damage or injuries, including crashes, loss of control, or water ingress, caused by abusing or modifying the original aircraft structure,
- Damage or injuries caused by using broken & aging components.
- Damage or injuries caused by continuing to fly the aircraft even if the low battery alarm is activated.
- Damage or injuries caused by failure to wash the components with fresh water after flying over or near the sea & corrosive waters.
- Damage or injuries that have occurred when the aircraft has been subjected to the following conditions or situations: collision, fire, explosion, floods, tsunamis, ice, snow, avalanche, flooding, landslide, earthquake, etc.
- Damage or injuries incurred by intentionally dropping or crashing the Splash Aircraft into the water from a high altitude, especially water ingress into the aircraft fuselage and gimbal malfunction.
- Damage due to not following the user manual and maintenance manual properly.
- Damage caused by operating the product at a weight greater than the safe takeoff weight, as specified by instruction manuals.
- Damage caused by attaching payloads during flight or hover, in violation of the user manual's guidelines.
- For any reason, the user cannot retrieve the aircraft for further diagnosis and examination.
- The user is not able or unwilling to provide the flight log to Swellpro for diagnosis and examination.
- Any attempt to modify flight log data noticed by SwellPro.
- not charging it for a long time will cause the battery to over-discharge and cause permanent damage.
- Damage caused by not charging the battery for a long time due to not following the user manual and maintenance manual properly.
- Other Damage(s) or injuries that are not SwellPro's liability.

End Use Statement

This product may be subject to export control laws in China, U.S, EU or other countries, which can only be authorized for civil(not military)use in sale, export or domestic transfer. Users need to confirm the product will not be used in the following situations; otherwise he or she will assume all losses caused by usage in such situations and legal responsibility on their own:

1. any military end use;
2. used for nuclear weapons, biological or chemical weapons or missiles that carry those weapons;
3. export or re-export or transfer it to any entity or person sanctioned by China, U.S, EU

©2026 SwellPro All Rights Reserved

or any other government with jurisdiction;

4. export, re-export or transfer it to Cuba, Iran, North Korea, Syria, Crimea, Sevastopol and other areas under embargo;
5. any device or equipment that supports monitoring purpose.

Social Media

Join our Facebook page to meet other people who share their adventures with SwellPro.
www.facebook.com/SwellPro/

facebook

Enterprise

Fishing

SwellPro Fishing Drone Owner Group

https://www.facebook.com/groups/splashdrone4

SwellPro Enterprise Drone Owner Group

https://www.facebook.com/groups/1263815084895535

Warranty Information

SwellPro

For the after-sales policy of the product,please visit:

https://www.swellpro.com/pages/support-center

Tutorial video

YouTube

Please Scan the QR code to view the SD4+ first flight tutorial video.

 ©2026 SwellPro All Rights Reserved

Content

Thank You 3
Copyright 3
Using Manual 3
Disclaimer and Warning 4
End Use Statement 5
Social Media 6
Warranty Information 6
Tutorial video 6
Content 7
Using for the first time 9
Charging 9
Install the Aircraft 10
Adjust Aircraft Antenna Position 10
Install Propellers 11
Install/Remove Flight Battery 11
Install The MicroSD Card 13
Install the Camera/Accessories 14
Power On/Off 15
Product Overview 16
Aircraft Diagram 16
Remote Controller Diagram 17
Flight Safety 19
Flight Operation Regulations 19
Flight Safety and Environment 20
Flight Restrictions 21
Wireless Communication Requirements 21
Aircraft Calibration 22
Compass Calibration 22
Standard flight operation 23
Pre-Flight Checklist 23
Basic Flight Steps 23
Flight 24
Basic Flight 24
Starting/Stopping Motors (Arming the Drone) 24
Joystick Controls 25
Take off and landing 25
Flight Modes 26
Dynamic Return To Home (RTH) 27
Return point 27
To start Return-to-Home: 27
Return Home Process 28
Low Battery Return to Home 28
Low Battery Auto Payload Release 29
Failsafe RTH 29
Advanced Flight 30
Power Flip 30
Water Takeoff and Landing 30
Boat Takeoff and Landing 30
Circle Mode 30
Cruise Mode 31
Follow me Mode 31
Aircraft 32
Aircraft Status Indicator 32
Intelligent Battery 33
Powering On/Off the Battery 33
Battery Level 33
Battery Warning Signs 34

©2026 SwellPro All Rights Reserved

Waterproof Barometric Membrane 34
Gimbal camera 35
Gimbal Operation Modes 35
Payload release 36
Remote Controller 37
Operation 37
Remote Control Antenna 38
RC Antenna Blind Spot 38
Optimal Signal Transmission 39
Pairing The Remote Controller 39
Pairing 39
SDFly3 App 41
Home Screen 41
Main Interface 42
Map Interface 44
Setting 46
Safety 46
Control 46
Camera 46
Other 46
Appendix 47
Specifications 47
Battery Care and Maintenance 49
Battery Charging 50
Precautions for low-temperature use 51
Battery Storage and Transportation 51
Battery Disposal 52
Inspection 52
Fuselage 52
Battery 52
Motor 52
Propeller 53
Maintenance And Store 53
Daily Maintenance 53
Store and Transport 53
FCC Caution 54
Version Information 54

 ©2026 SwellPro All Rights Reserved

Using for the first time

Users must fully comply with all operational steps and safety warnings in this manual when installing and operating the drone. The user assumes full responsibility for any issues arising from non-compliance, including, but not limited to, equipment damage, flight accidents, and other similar incidents.

Charging

⚠The SplashDrone 4+ is shipped with partially charged batteries. Ensure the drone and remote controller batteries are fully charged before use.

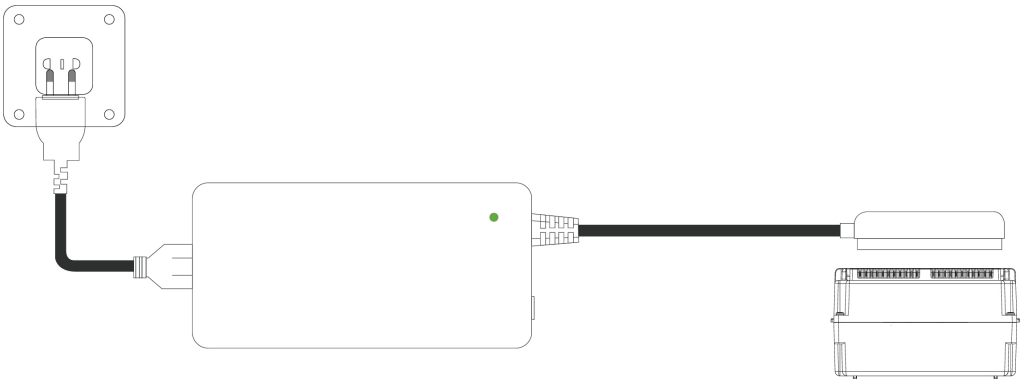

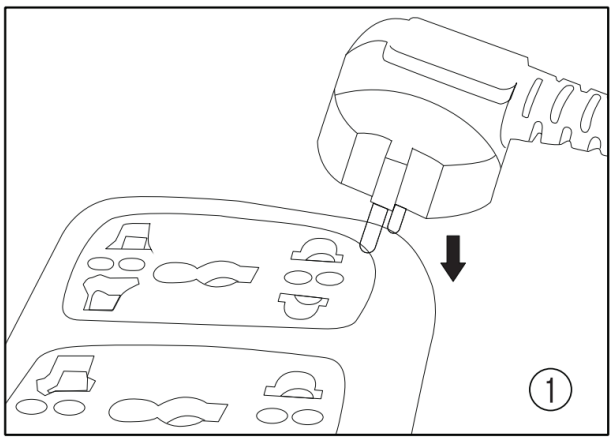

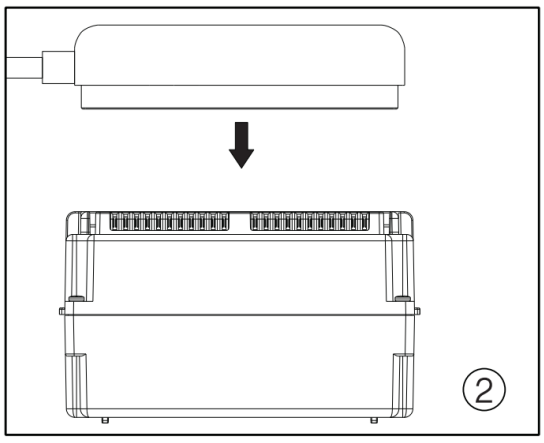

1. Refer to the above figures to charge the flight battery. **Once fully charged (about 25.2 volts),** the flight battery will stop charging, and the LED will light solid green. Please remove the battery promptly.
2. The remote controller can be charged from a standard 5V USB adapter. Recommend using a 5V/3A USB adapter. The LED light on the remote controller will flash while charging. The LED light will turn solid green when the remote controller is fully charged.

©2026 SwellPro All Rights Reserved

⚠
- Keep the battery slot AWAY FROM WATER. Store the battery in a cool, dry place.

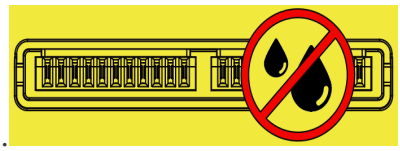

- Long-term storage humidity: 65±20%.
- Do not fly the drone with a battery voltage below 18.0 volts.
- The SplashDrone 4+ battery has a storage mode for self-discharging to the appropriate voltage. To maintain it, fully charge and discharge every 3 months during storage.

Install the Aircraft

Adjust Aircraft Antenna Position

The aircraft's antennas can be oriented upwards or downwards to maximize reception in different situations.

Due to the way radio frequencies travel, when flying 0.5 m above the water, the transmission range reduces to 2.8 km. For the drone floating on the water surface, the transmission range reduces to 500 m.

Adjust the antennas' orientation to ensure a stable connection for your flight.

To adjust the antenna position, loosen the antenna nut, adjust the antenna as needed, and retighten the nut.

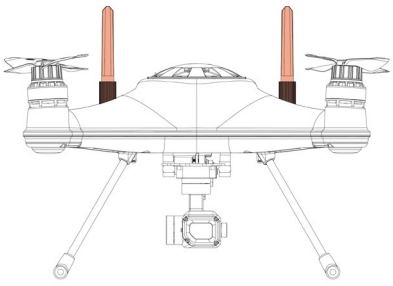

Antenna oriented upward: Improves reception when the aircraft flies close to the water surface.

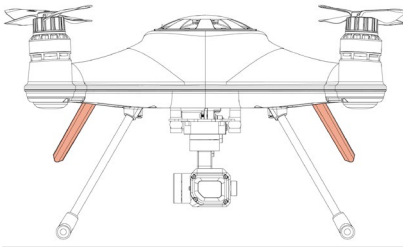

Antenna oriented downwards: Improves reception when the aircraft is flying high.

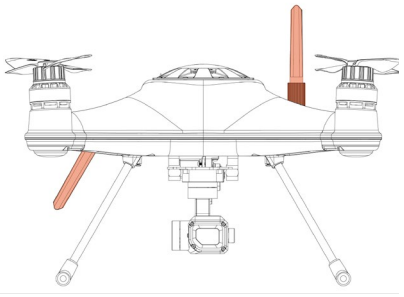

Antenna up and down: When the aircraft needs to activate power-flip.

 ©2026 SwellPro All Rights Reserved

Install Propellers

There are two pairs of propellers **A/B**. Propeller A has orange dots, and Motor A has the same dots. To install the propeller, please follow the A-A/B-B corresponding relationship.

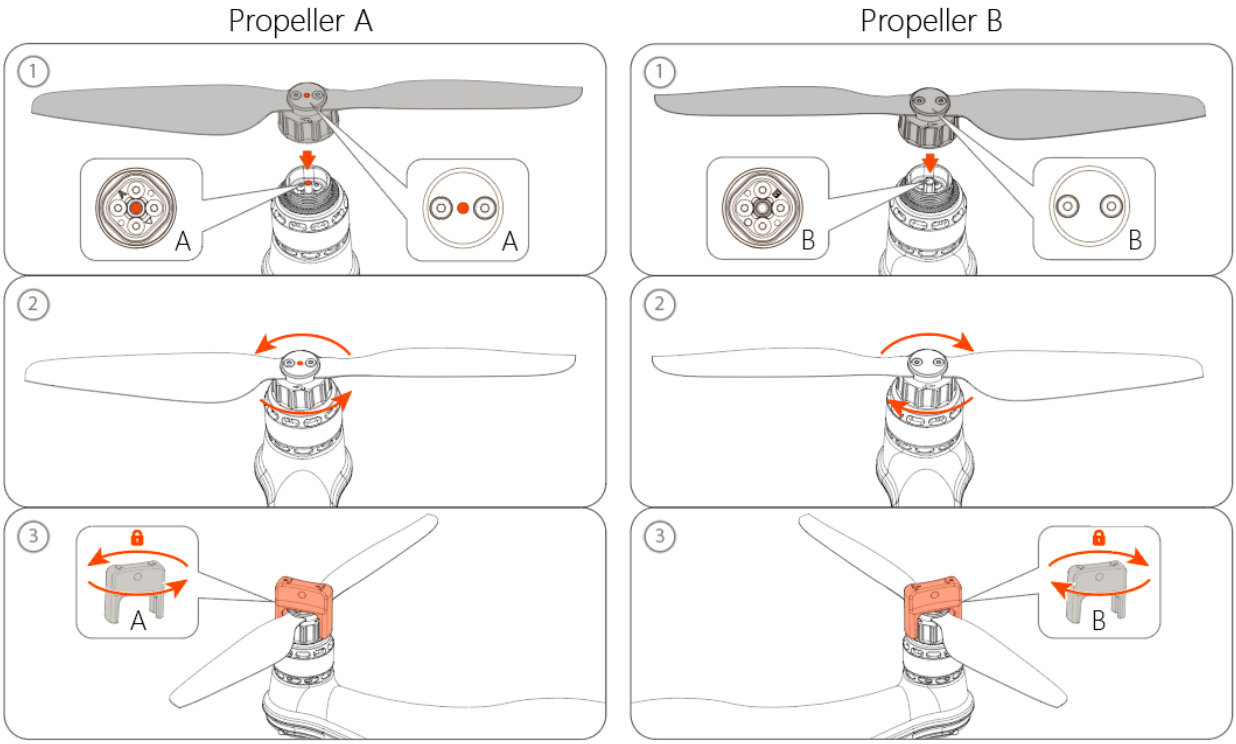

1. Place propeller A on motor A/Place propeller B on motor B.
2. Hold the motor firmly and use your other hand to rotate the propeller nut.
3. Lock the propeller nut with the in-the-box tool shown above(as figure ③)

⚠
- Always support the motor with one hand during propeller installation or removal to prevent landing gear damage.
- Avoid touching rotating blades to prevent cuts, as propellers are sharp.
- Do not use damaged propellers; replace them before flight.
- After installation, ensure the propeller does not wobble; if it does, tighten the screws.
- Before each flight, check that propellers are smooth, properly installed, and securely fastened, and spin them by hand to ensure the motors are clean and spin freely.

Install/Remove Flight Battery

The flight battery is quick and easy to install.

©2026 SwellPro All Rights Reserved

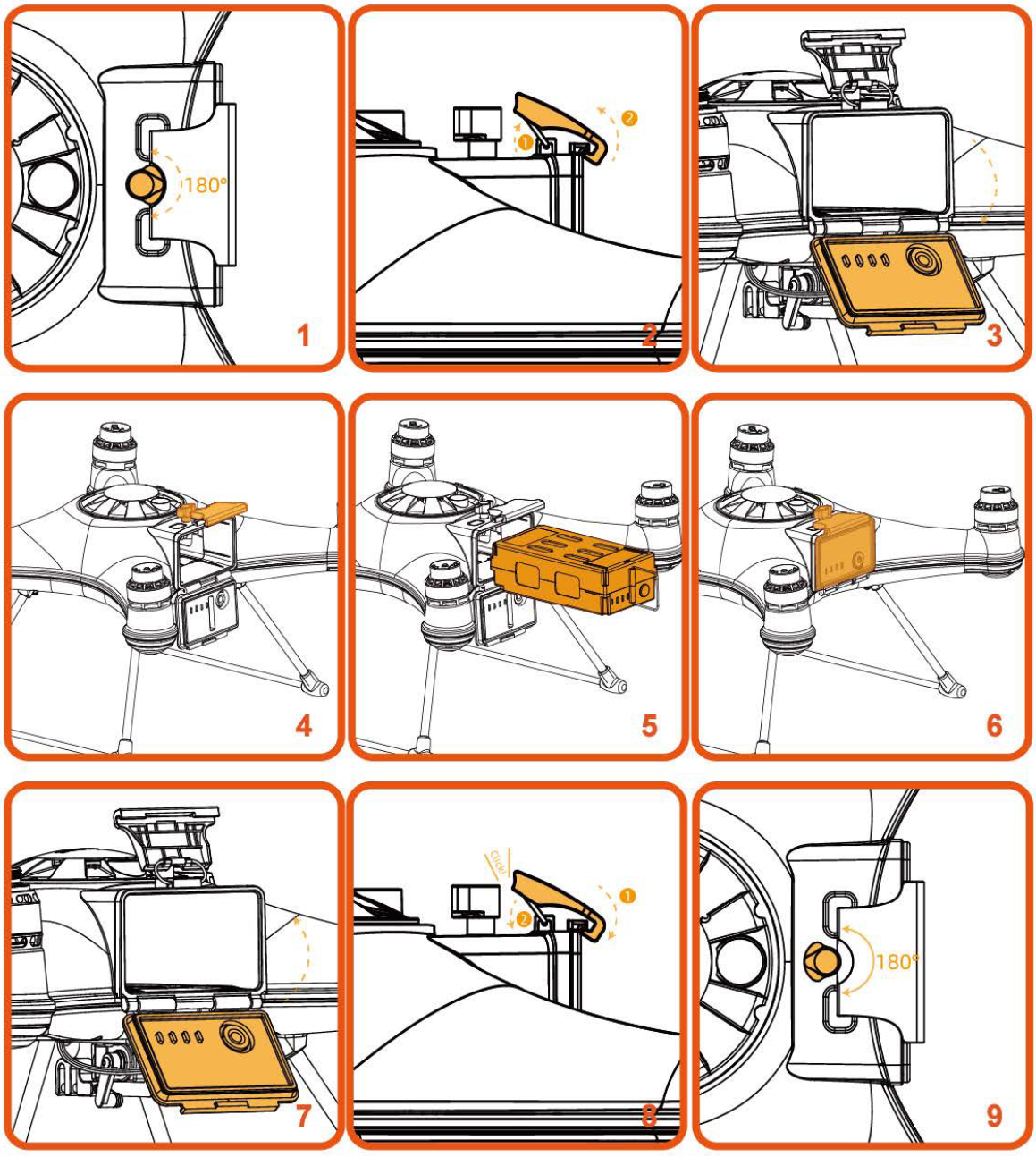

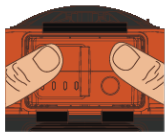

When slide in the battery, ensure to firmly press the battery into the battery slot to prevent water ingress.

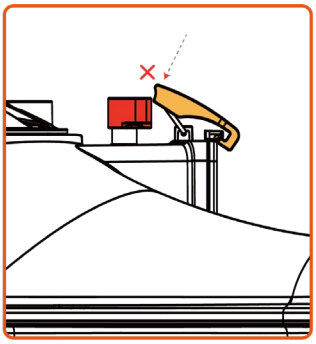

 ©2026 SwellPro All Rights Reserved

⚠
- When sliding the battery into place, please ensure that you firmly press it into the battery slot to prevent poor battery contact during flight.
- Always ensure that the hatch door's waterproof seal is clean and lightly lubricated.
- The drone is no longer waterproof when the battery hatch is open.
- **Do not allow water or sand to enter the drone while the battery hatch is open.**

The manual's Appendix contains additional warnings and precautions regarding the batteries, safety, charging, and maintenance. Please familiarize yourself with all the information.

Install The MicroSD Card

01 Open the rubber seal at the top of the camera, insert the microSD card in the correct direction, and press the microSD card with your thumbnail. You should hear a "click" sound, indicating that it is installed correctly.

02 After installing the microSD card, please re-secure the rubber seal.

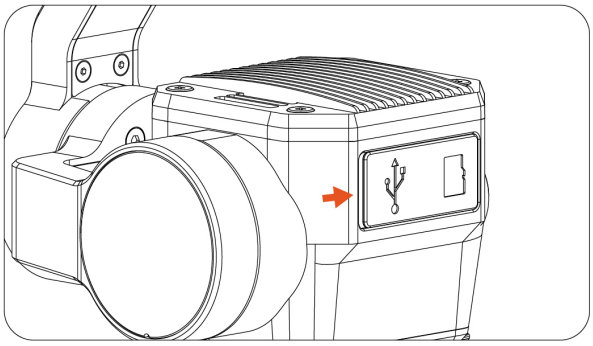

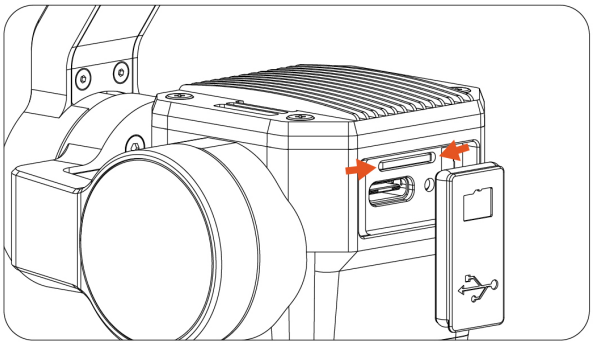

⚠**Make sure the rubber plug and sealing surface are free of dust, sand, and other impurities. Press the rubber plug tightly to prevent the camera from getting wet.**

©2026 SwellPro All Rights Reserved

⚠
- Do not insert or remove the SD card or battery while shooting or with power on, as it may damage the SD card and cause data loss.
- Always stop and save the file after recording; cutting power can damage or lose files.
- Check camera settings and test images before use to ensure proper operation.
- Photos and videos cannot be transferred when the aircraft is off.
- Ensure proper shutdown to save camera parameters and avoid affecting recorded videos; failures are not the manufacturer's responsibility.
- The session recording limit is 30 minutes for stability, supporting micro-SD cards up to 256 GB with U3 or higher speeds for high-bitrate video.

Install the Camera/Accessories

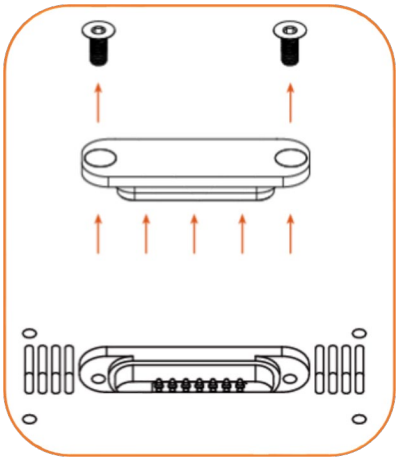

Using a hex screwdriver, remove the gimbal port cover plate. (Equipped with SplashDrone 4+

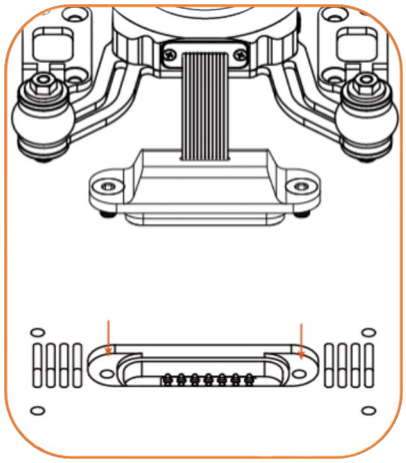

Plug the gimbal connector into the drone's gimbal port and screw it in place with a screwdriver.

⚠ **Make sure the rubber ring is attached to the gimbal connector before you screw the connector.**

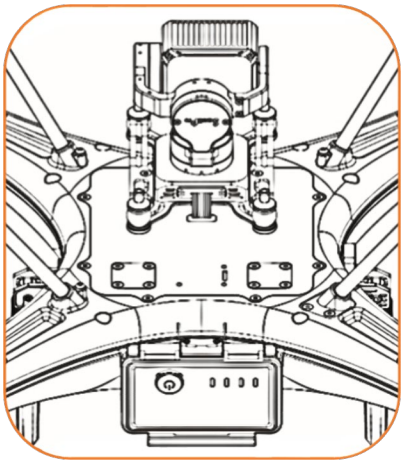

Ensure the camera is positioned to face forward.

Other accessories can be replaced or installed in the same way.

 ©2026 SwellPro All Rights Reserved

Power On/Off

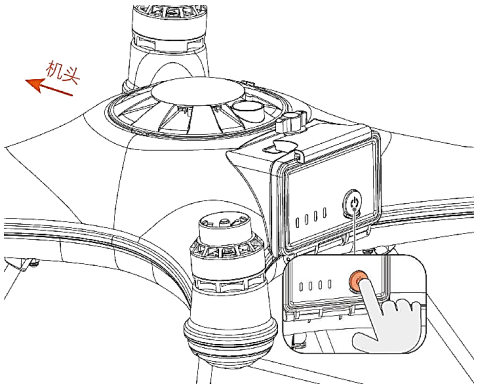

AIRCRAFT POWER ON/OFF

- **Power on/off: Press the power button briefly, then hold it down for 2 seconds.**
- Power on: The arm light will turn on, and the motor will emit a "beep beep beep" self-check sound to complete the power-on.
- Power off: The arm light will turn off, and after about 3 seconds, the battery indicator lights will turn off individually to complete the power-off.

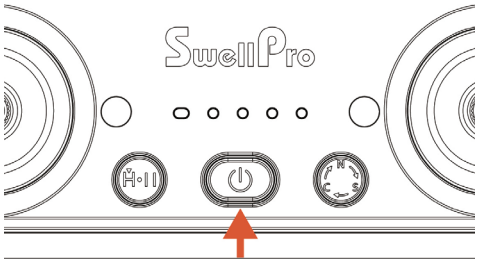

Remote controller

- Power on/off: Press the power button briefly, then hold it down for 2 seconds.

⚠ Turn on the remote first, then the aircraft. To turn off, switch off the aircraft first, then the remote.

©2026 SwellPro All Rights Reserved

Product Overview

Aircraft Diagram

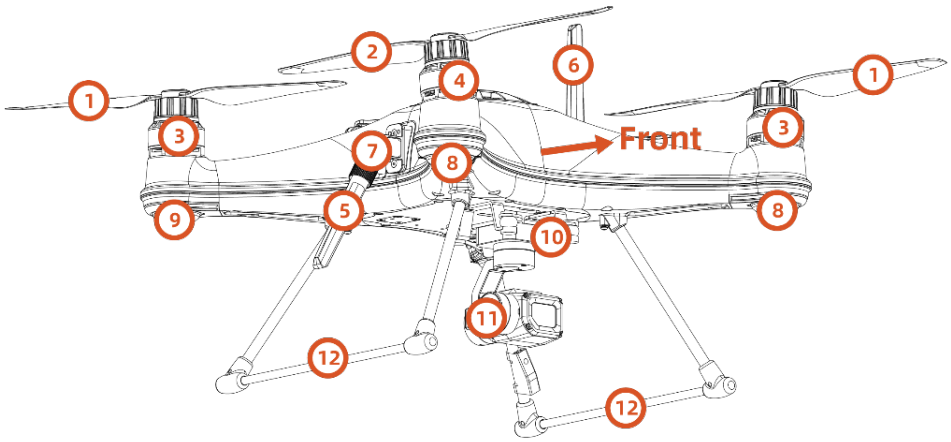

01 Cw Propeller
02 Ccw Propeller
03 Cw Motor
04 Ccw Motor
05 Left Antenna
06 Right Antenna
07 Antennas Knob
08 Front Aircraft Indicator Light
09 Rear Aircraft Indicator Light
10 TOF
11 Gimbal Camera
12 Landing Gear

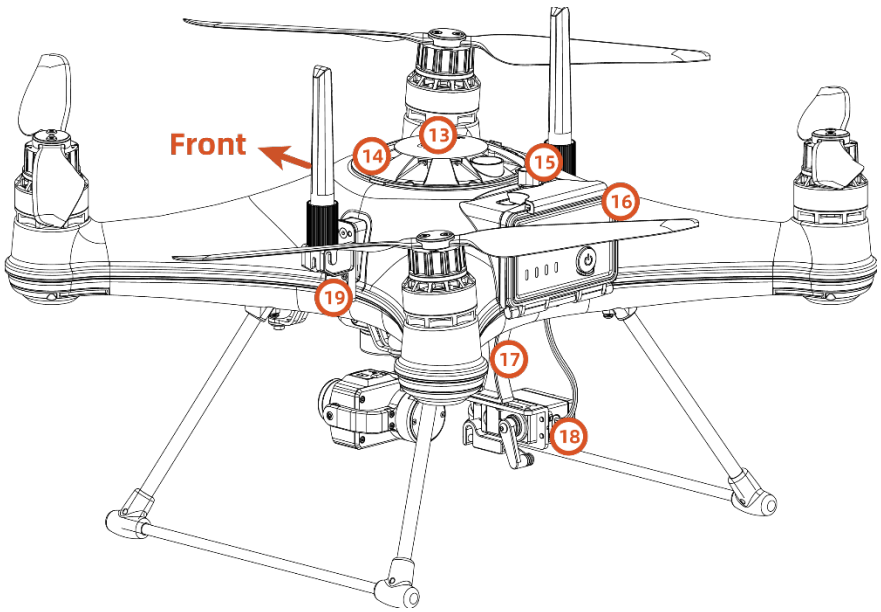

13 Waterproof Membrane Cover
14 Top Cover
15 Battery Hatch Cover Latch
16 Battery Hatch Cover

 ©2026 SwellPro All Rights Reserved

17 Payload Release Bracket
18 Payload Release
19 Compass

Remote Controller Diagram

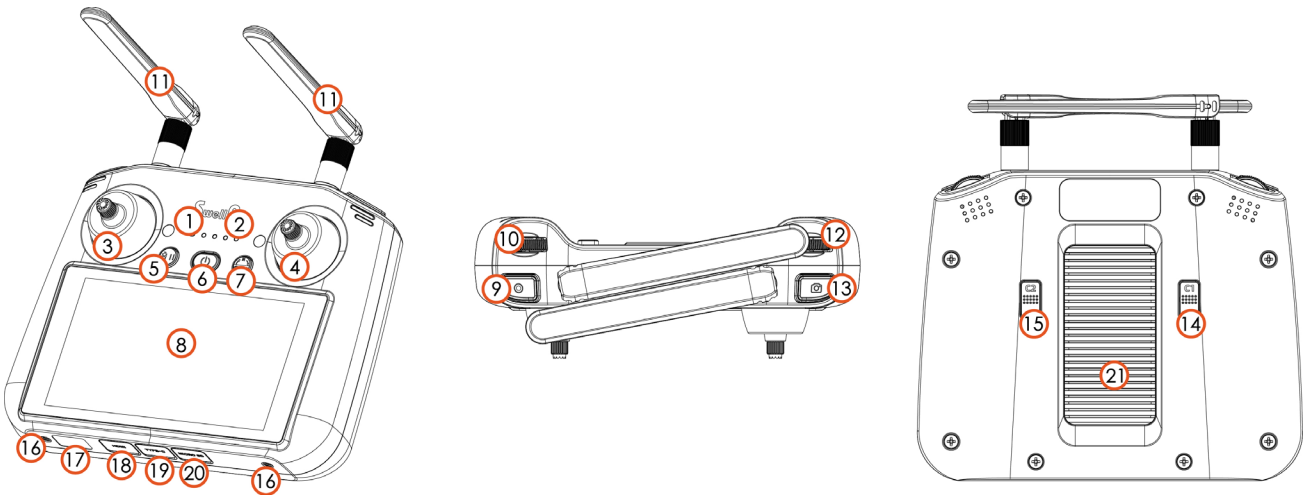

01 Status LED

Indicates the status of the remote controller.

02 Battery Level LEDS

Display the battery level of the remote controller.

- Solid red: Time available is less than 30 minutes.
- Blinks red: The battery level of the aircraft is too low.
- Solid green: Connected with the aircraft.

03 Left Joystick

Control to change the altitude and orientation of the aircraft.

04 Right Joystick

Control to change the pitch and roll of the aircraft.

05 Return to Launch / Emergency Stop Button:

Press briefly for emergency stop and hover; press for 2 seconds to activate return-to-home, and cancel with a brief press. During return, the drone's nose points to the return point; joystick control can't exit return-to-home.

06 Power Button

Press once to check the current battery level. Press and hold to power the remote controller on or off. Press once when the remote controller is powered on to turn the touchscreen on or off.

07 Flight Mode Switch

For switching between three flight modes: Switch between Cine, Normal, and Sport.

©2026 SwellPro All Rights Reserved

08 **5.5inch Touchscreen**

Touch the screen to operate the remote controller.

09 **Record Button**

Press once to start or stop recording.

10 **Gimbal Dial**

Controls the tilt of the camera.

11 **Antennas**

Transmit control and video wireless signals between the remote controller and the aircraft.

12 **Camera Control Dial**

Control zoom in/out.

13 **Shutter Button**

Press down to take a photo. Press once to switch to photo mode when in record mode.

14 **Customizable C1 Button**

Press once to confirm a selection. The button has no default function in SDFly3, but you can set it in Camera View > Settings > Safety Settings > Button Customization.

15 **Customizable C2 Button**

Press once to confirm a selection. The button has no default function in SDFly3, but you can set it in Camera View > Settings > Safety Settings > Button Customization..

16 **Fixed Extension Nuts**

It can be used as an accessory, such as straps or brackets.

17 **Speaker**

18 **Mini HDMI Port**

For outputting an HDMI signal to an external monitor.

19 **USB-C Port**

This is for charging and connecting the remote controller to the computer.

20 **MicroSD Card Slot /Pairing Button**

For inserting a microSD card. **Pairing** Button: If the remote cannot pair, press the pairing button to reset and complete the pairing process.

21 **Heat Sink**

Used for cooling the remote controller. When used, the temperature of the heatsink is high, do not touch.

 ©2026 SwellPro All Rights Reserved

Flight Safety

After the first unboxing, please scan the QR code to obtain the latest version of the manual. Please read and understand the entire manual carefully to ensure the safe and correct use of the aircraft.

Before engaging in actual outdoor flights, it is essential to undergo relevant basic flight training (such as watching instructional videos and receiving guidance from professionals) to familiarize oneself with the aircraft's functions and characteristics and the remote controller's features. Before your flight, please familiarize yourself with all local laws and regulations regarding civilian unmanned aerial vehicles. Choose an appropriate flight environment, set a reasonable flight altitude, and conduct legal flights in accordance with relevant flight requirements and restrictions. Using the aircraft in unsuitable flight environments may pose legal risks. Before flight, be sure to read the "**Disclaimer and Warning**"to understand relevant safety precautions.

Flight Operation Regulations

Before flying, it is crucial to understand and adhere to the following flight operation regulations.

- Operating the aircraft while under the influence of alcohol, drugs, medication-induced impairment, dizziness, fatigue, nausea, or any other compromised physical or mental condition is strictly prohibited.
- Avoid flying near manned aircraft and ensure that the aircraft's flight does not impact larger manned aircraft on their flight paths. Remain vigilant, steer clear of other aircraft, and land immediately if necessary.
- Do not fly in areas prohibited by local regulations without obtaining authorized permits.
- Prohibited areas may include airports, borderlines, major cities and densely populated areas, large event venues, emergencies (such as forest fires), and sensitive building facilities zones (such as nuclear power plants, power stations, hydroelectric plants, prisons, traffic arteries, government buildings, and military facilities).
- Prohibit the use of the aircraft at large event venues, including but not limited to sports stadiums and concerts.
- Avoid flying in airspace exceeding the regulated altitude.
- Do not use the aircraft to carry any illegal hazardous materials.
- Ensure a clear understanding of the type of flight activity (e.g., recreational, official, or business). Obtain permits from relevant authorities before flying. If

©2026 SwellPro All Rights Reserved

necessary, consult with local legal professionals for detailed definitions and explanations of flight activity types.

- When using the aircraft for filming, respect the privacy of others. It is strictly forbidden to use this product for any unauthorized surveillance activities, including but not limited to monitoring individuals, groups, events, performances, exhibitions, or buildings.
- Please note that recording or photographing others, groups, events, performances, exhibitions, etc, without legal authorization may violate copyright, privacy rights, or other lawful rights of others. Therefore, it is essential to thoroughly understand and comply with local laws and regulations before use.

Flight Safety and Environment

- Avoid flying in adverse weather conditions such as strong winds, snow, rain, heavy fog, sandstorms, extreme cold, or high temperatures. The maximum wind speed resistance is 12 m/s.
- Ensure the aircraft takes off from and lands on open, unobstructed, and flat ground. Keep a safe distance from crowds, surrounding buildings, trees, etc., and control the aircraft within visible range to ensure flight safety.
- Fly at altitudes below 3000m.
- Due to poor lighting conditions, GNSS signal loss, narrow spaces, etc., some aircraft functions may be restricted. Always be aware of the surrounding environment and maintain safe control of the aircraft. For night flights, please choose open, uninhabited areas and ensure the landing lights are on for safety.
- Avoid taking off or landing on moving platforms, such as moving vehicles, boats, etc.
- Avoid taking off or landing on sandy surfaces to prevent raised dust from affecting the lifespan of the motors.
- The performance of the smart battery is influenced by environmental temperature and air density. Use the aircraft in environments ranging from-10 °C to +40 °C.
- When using the aircraft in disaster-stricken areas after events such as fires, explosions, lightning, storms, tornadoes, heavy rain, floods, earthquakes, sandstorms, etc., pay special attention to the safety of takeoff and landing points and changes in the surrounding environment. Prioritize personal safety.
- Stay away from steel structures, iron mines, etc.,to avoid interference with the aircraft's compass.
- Before flying in low temperatures, warm the battery to 25℃ to maximize flight time.
- Although the Splashdrone SD4+ is waterproof, do not fly in fog or strong wind conditions. (For wind speed exceeding 14 m/s)

 ©2026 SwellPro All Rights Reserved

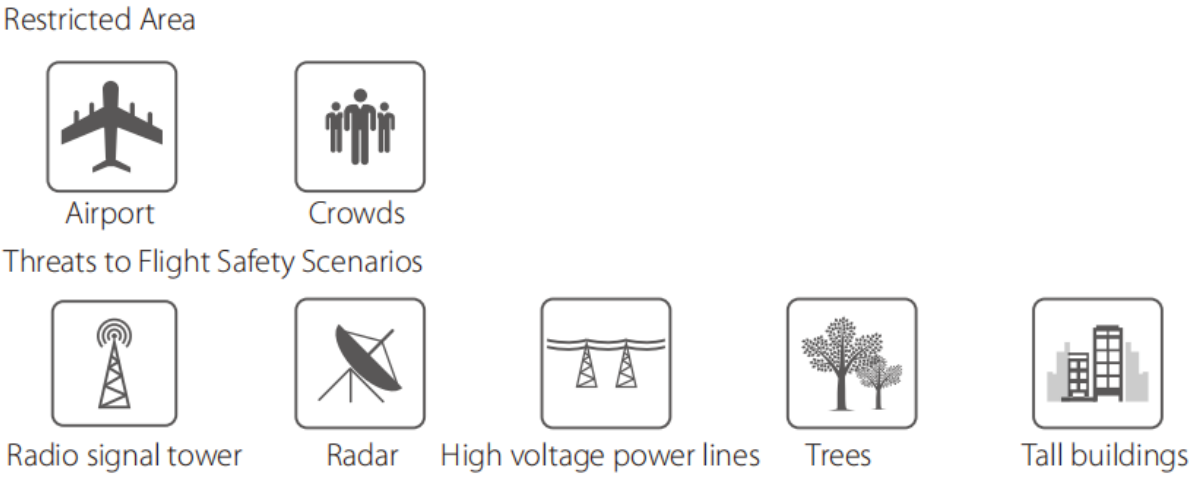

Flight Restrictions

According to provisions of the International Civil Aviation Organization and many national air traffic regulations, aircraft must be operated in specified airspaces. By default, the Splashdrone SD4+ is configured not to exceed an altitude of 120m from the Home Point altitude.

Wireless Communication Requirements

- Stay away from areas with strong electromagnetic interference, such as radar stations, microwave stations, mobile communication base stations, drone interference devices, etc., and maintain a distance of at least 200 meters.
- Exercise caution when flying near electromagnetic interference sources and continuously monitor and assess the stability of the remote controller's video transmission signal and image. Common sources of electromagnetic interference include, but are not limited to, high-voltage transmission lines, high-voltage substations, mobile communication base stations, and TV broadcast signal towers. If significant interference occurs in these areas during flight operations, the aircraft may not be able to fly normally, so return and landing should be done promptly.
- Choose open, spacious areas or high ground for flying. Tall mountains, rocks, urban structures, and forests may obstruct the GNSS signal and the aircraft's video transmission signal.
- It is recommended to turn off unnecessary Wi-Fi and Bluetooth devices in the vicinity to avoid interference with the remote controller signal.

©2026 SwellPro All Rights Reserved

Aircraft Calibration

Compass Calibration

Compass calibration is necessary for any of the following situations:

- The drone has just been repaired.
- The drone has been subjected to strong magnetic fields.
- The drone has been crashed or subjected to heavy shaking.
- The drone sways or drifts excessively during hovering in Normal mode.
- The drone is farther than 500 km distance away from the last calibration location.
- The drone is not able to fly straight.
- The drone's flight direction does not align with the input commands from the remote controller.
- The remote controller screen prompts 【Compass interfere】.

Please calibrate it according to the following steps. The Compass Calibration interface will automatically close upon successful completion.

	Operation	Indication
1	**Initiate Calibration:** Push both control sticks to the top-left corner. The aircraft's buzzer will start to emit a **continuous long beep**.	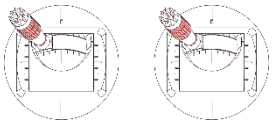
2	**Horizontal Rotation: Hold the aircraft horizontally and rotate it clockwise (360°) until the long beep stops.**	
3	**Vertical Rotation (Nose Up):** After the long beep stops, point the aircraft's nose upwards. A **series of single beeps** (beep... beep...) will begin. Now, rotate the aircraft clockwise until the beeping stops.	 Fornt
4	**Vertical Rotation (Sideways):** Next, turn the aircraft on its side. A **series of double beeps** (beep-beep... beep-beep...) will begin. Now, rotate the aircraft clockwise until the beeping stops.	Fornt 

Completion: When the buzzer is silent, the compass calibration is complete.

💡 Alternatively, calibration can be initiated from the app by navigating to **System Settings > Compass Calibration**.

 ©2026 SwellPro All Rights Reserved

Standard flight operation

Pre-Flight Checklist

- Charge the remote controller and Intelligent Flight Battery fully.
- Ensure the battery, propellers, and waterproof membrane are secure and undamaged.
- Verify that the gimbal, camera, motors, antenna, and connector sealings are functioning correctly and free of debris.
- Insert and seal the Micro SD card properly.
- Confirm the SDFly3 connects to the aircraft and all lenses and sensors are clean. Use only genuine SwellPro parts.
- Ensure the antenna fixing nut is tightened securely and the antenna is correctly positioned.
- Only use genuine SwellPro parts or SwellPro authorized parts. Unauthorized parts may cause system malfunctions and compromise flight safety.
- Check the following flight data: flight battery> 90%; remote controller battery> 1 bar; GPS Satellite count>20.
- Ensure the map has been fully cached and the remote controller's WiFi is turned off.

Basic Flight Steps

1. Complete the Pre-Flight Checklist.
2. Install the propellers.
3. Install the flight battery.
4. Place the aircraft on level, open ground or a water surface.
5. Power on the remote controller first, then power on the aircraft.
6. For your safety, always stand upwind of the aircraft and maintain a distance of at least 3 meters.
7. Novice operators should take off in Normal mode.
8. Refer to the "Takeoff" section to start the motors and take off.
9. Refer to the "Aircraft Control" section for flight operation instructions.
10. Refer to the "Landing" section to safely land the aircraft, then lock the motors.
11. **Warning: Do not approach or touch the aircraft until the propellers have come to a complete stop and the motors are confirmed locked.**
12. After operating in saltwater or polluted water, the aircraft must be rinsed thoroughly with fresh water immediately, especially the gaps of motors, gimbals, and the camera. prior to the drying of salt and sediment on its components.
13. Remove battery.
14. Wipe drone and accessories dry, store in case. Prevent water from causing short-circuits or damage.

©2026 SwellPro All Rights Reserved

Flight

Basic Flight

Starting/Stopping Motors (Arming the Drone)

Before beginning the drone, take the following precautions:

Place the aircraft 3 m away from yourself and others in an open area. Once powered on, it will perform a self-check, followed by a confirmation tone.

Starting (Arming) Motors

Remote controller operation	Description
	Check GPS satellite count > 20, location positioning is successful Pull both joysticks down and inwards simultaneously for 3 seconds to unlock and start motors.

Stopping Motors

⚠ **After landing, the motor must be locked. There are two locking modes:**

Remote controller operation	Description
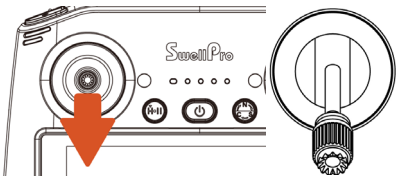	**Method 1: Pull the throttle to the lowest for 3 seconds after landing; the motor will lock and stop.** The recommended method for stopping motors.
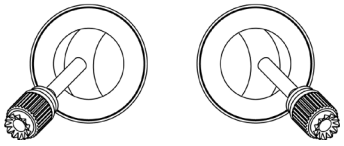	**Method 2: After landing, wait until the motor idles, then pull both joysticks down and outwards. This serves as an emergency stop.** ⚠ Stopping the motors in flight may cause the drone to crash and should only be done in an emergency when it minimizes damage, such as avoiding hitting people or crowds.

 ©2026 SwellPro All Rights Reserved

Joystick Controls

LEFT JOYSTICK controls Throttle & Yaw;

RIGHT JOYSTICK manages Pitch & Roll. YAW sets direction; THROTTLE controls ascent/descent; PITCH makes the drone move forward/backward; ROLL moves it left/right.

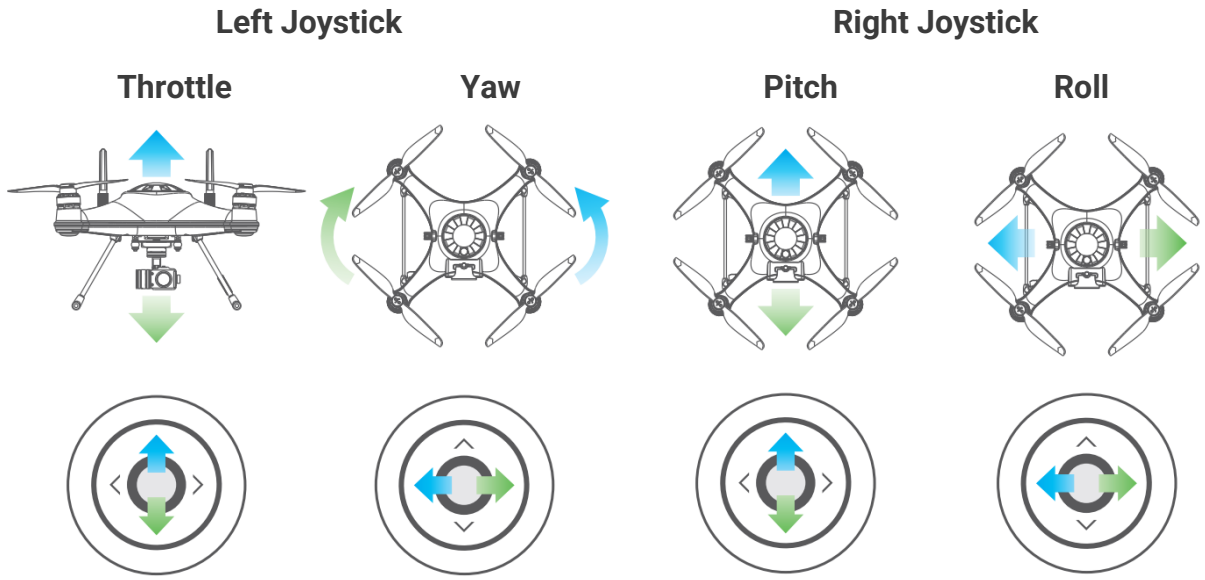

Take off and landing

Manually take-off

1. Place the aircraft on a flat and open ground.
2. Complete all pre-flight checks.
3. Turn on the remote controller, then turn on the aircraft. Start the aircraft motor.
4. Gradually increase the throttle for a smooth takeoff. At 1.5 m altitude, release the throttle and hover briefly to check stability. Once confirmed, proceed with the flight.

Manually landing

1. Check the conditions for a safe landing.
2. Slowly pull the throttle down to make the aircraft descend and land on a flat surface or water.
3. **After landing, pull the throttle down to the lowest position and hold it for 3 seconds until the motor stops.**

Auto Takeoff

Use the Auto Takeoff function:

1. Launch the SD Fly3 App and enter the camera view.
2. Complete all steps in the pre-flight checklist.
3. Tap If conditions are safe for takeoff, press and hold the button to confirm.

©2026 SwellPro All Rights Reserved

4. The aircraft will take off and hover approximately 2m above the ground.

Auto Landing

Use the Auto Landing function:

1. Tap , If conditions are safe for landing, press and hold the button to confirm.
2. **After landing, please wait for the motor to stop automatically.**

Flight Modes

The SplashDrone 4+ supports the following flight modes: Normal, Cine, and Sport.

You can switch between Normal >Cine > Sport using the buttons on the remote control.

Flight Modes	Description
N-Normal	In **Normal** mode, the aircraft maintains a fixed position and height while hovering.
C-Cruise	In Cruise mode, the aircraft will maintain its current heading and speed to continue flying forward. Speed: Push the stick in the opposite direction to slow down or reverse. Release the stick to lock the new speed.The maximum cruise speed is limited to 10 m/s. Altitude: Use the throttle stick to ascend/descend. Release the stick to hold the current altitude. Heading: Use the yaw stick to turn the aircraft. The cruise direction will change accordingly. Exit : switch the flight mode to Normal mode.
S-Sport	In this mode, the maximum horizontal flight speed reaches 18m/s, improving work efficiency. This feature allows the aircraft to quickly fly back to its takeoff point without a payload after completing a delivery.

⚠
- When the GPS signal is disrupted, the aircraft will automatically switch to Mode A for manual control. It will revert to Normal mode once the GPS signal is restored.

 ©2026 SwellPro All Rights Reserved

Dynamic Return To Home (RTH)

The SplashDrone 4+ has an automatic return-to-home with one-touch, low battery, and failsafe options. When the aircraft logs a return point, has over 20 GPS satellites, and the user enables return modes, or if communication or video is lost for over 4 seconds, it automatically returns and lands.

Return point

The return point can be set on the remote controller as either the takeoff point or remote controller location.

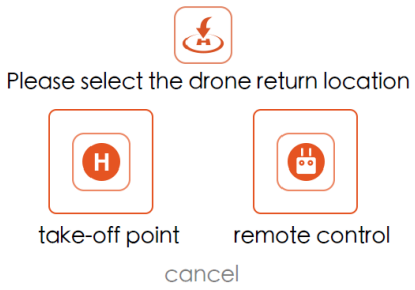

To start Return-to-Home:

- Long-pressing the Return Home button causes the remote to beep, and change the status bar to 'R', indicating the drone is initiating RTH..
- Return-to-Home can also be initiated on the App.
- The RTH height can be set on the App.

- Press and hold the return-to-home button or tap the SDFLY3 App icon to activate RTH. The remote display will show "R" indicating the aircraft is in Return to Home mode.
- During the return, a short press of the return button can exit the return, and the aircraft's brakes maintain hover. The user can regain control of the aircraft.
- During the return, the nose points towards the return point. During the execution of the return, controlling any joystick cannot exit the return.

⚠
- If the aircraft's GPS signal is too weak (red), the aircraft will be unable to initiate RTH.
- During return, the aircraft must constantly monitor for obstacles and make adjustments to avoid them.

©2026 SwellPro All Rights Reserved

Return Home Process

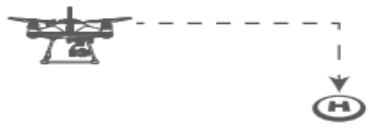

If the aircraft's height exceeds 20m, the drone will maintain its height and return to its home point before landing.



If the aircraft's height is lower than 20m and the distance from Home Point is greater than 15m, the drone will ascend to Return-to-Home Height and then return to its Home Point before landing.

Return-to-Home Height can be set in the App.

Low Battery Return to Home

Low battery auto Return-to-Home can be turned on or off through the App, depending on your preference. By default, it is on.

Low battery auto RTH will initiate when the drone's intelligent battery reaches the Level 1 low battery warning.

Level 1 alarm: The drone's battery level has reached 20%. The remote controller screen will prompt, **"Aircraft battery low, please land or return promptly."**

During return, short-press the RTH button to cancel. Automatic low-battery return happens once per flight. Cancelling the reminder and continuing to fly may leave insufficient power for landing, risking a forced landing, loss, or crash.



Level 2 alarm: The drone's battery level has reached 15%. The remote controller screen will prompt, **"The aircraft's battery is low. Please charge it promptly."**

After 10 seconds, the drone will auto-land in place to protect itself and its battery.

If the aircraft's battery is nearly depleted and only enough for landing, it will forcibly descend, and this can't be canceled. During this descent, if the remote control signal is standard, the aircraft's horizontal movement can be controlled with pitch and roll if the remote signal is stable, and descent speed with the throttle. Pushing the throttle up to prolong flight can cause the aircraft to fall once the battery is exhausted.

 ©2026 SwellPro All Rights Reserved

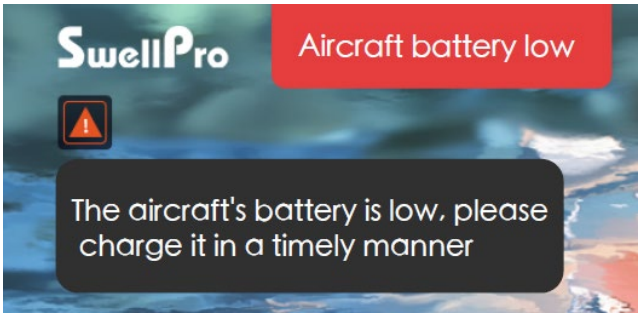

Low Battery Auto Payload Release

💡 Low-battery auto payload release improves safe Return-to-Home (RTH) when the aircraft carries a heavy load. It can be enabled or disabled in the SD Fly3 App > Security Settings > Low Battery Delivery Settings. Default is off.

⚠When it is enabled, the low battery auto payload release will trigger when the drone hits the level 1 low battery warning. When the drone's battery reaches level 1, a low battery warning will appear, and the drone will automatically release the payload before starting the low battery auto Return-to-Home process.

⚠ The low-battery auto payload release entails certain risks, and Swellpro disclaims any responsibility for losses arising from such deployments.

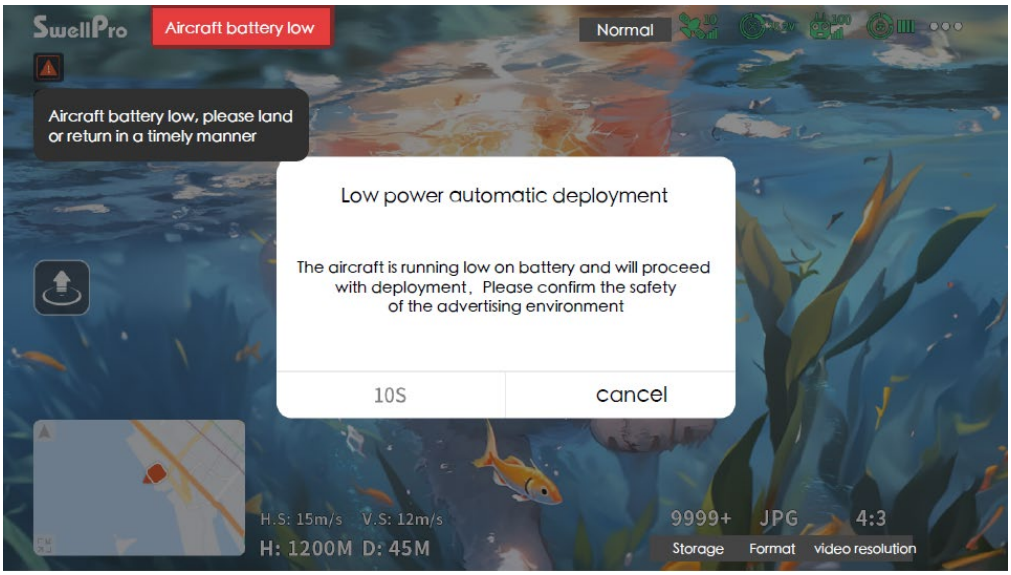

Failsafe RTH

💡 In the SD Fly3 APP > Settings > Safety, the aircraft's action when the remote controller signal is lost can be set to RTH, land, or hover.

⚠If the Home Point is recorded and the compass works (GPS satellites > 20), Failsafe RTH activates if the remote signal is lost over 4 seconds. The aircraft will remain in RTH even if the remote controller signal is restored.

©2026 SwellPro All Rights Reserved

Advanced Flight

Power Flip

If the drone becomes inverted on the water, the Power-Flip feature enables it to flip back to its upright position.

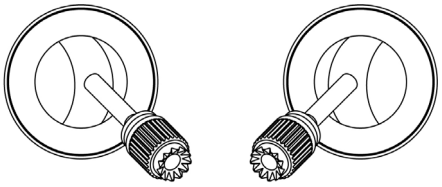

When the drone floats upside-down on water, pull both joysticks down and inward simultaneously and hold until it flips upright.

Water Takeoff and Landing

1. When taking off from choppy water, ascend quickly from the surface to prevent the drone from being affected by a passing wave.
2. When landing on water, descend vertically to the surface. If the drone lands with horizontal speed, it may flip and be inverted. The flight controller will shut down the motors if the drone becomes inverted on the water.

⚠ Do not leave the drone floating inverted for more than a few minutes. Flip the drone using the Power-Flip command or recover the drone as soon as possible to avoid water saturating the waterproof barometric membrane.

Boat Takeoff and Landing

When taking off or landing from the boat/kayak, **PAY EXTRA ATTENTION** to the operation, as it can be challenging and dangerous to operate the aircraft.

- Ensure enough space on the boat for drone takeoff and landing. If limited space, water takeoff/landing is safer.
- Be mindful of wind direction during these operations; stand upwind to avoid drifting.
- Don't launch or land SplashDrone 4+ from your hands.
- After starting return-to-home, take manual control and land when the drone approaches.

Circle Mode

In circle mode, the drone will proceed to a circular flight around the point of interest, with a default radius of 15 m. The orbit radius can be set through the App.

- The default loop height equals the aircraft's current altitude, adjustable from 10 m to 500 m. Throttle joystick cannot change loop height.
- Default radius is 20 m, with a minimum of 10 m and a maximum of 120 m. The right joystick cannot alter the radius.

 ©2026 SwellPro All Rights Reserved

- Direction: left or right circling.
- Number of loops varies as needed.
- Latitude and longitude can be manually entered for confirmation.
- Default loop speed is 2 m/second, adjustable from 1 to 10 m/second.

Cruise Mode

In Cruise mode, the drone will maintain the direction and speed of your input after you release the remote controller.

- Tap the cruise function on the SDFly3 app. The cruising speed can be as high as 10 m/s.
- After activating the function, controlling the pitch lever can accelerate or decelerate in a certain direction, accelerate up to a maximum of 10 m per second, decelerate to 0, then accelerate in the opposite direction. Releasing the lever maintains the current speed. The throttle lever controls the aircraft's ascent or descent, and releasing the lever maintains the current altitude. The yaw lever controls the aircraft's steering. •
- Using the RTH/emergency button exits the constant speed cruise function. Then, the aircraft hovers.

Follow me Mode

Once Follow Me Mode is activated, the aircraft will maintain a consistent distance from the remote controller and track its movements. Simultaneously, the aircraft's altitude will automatically adjust: it will ascend to 30 meters if flying below this height, or maintain its current altitude if already flying above 30 meters.

©2026 SwellPro All Rights Reserved

Aircraft

Aircraft Status Indicator

There are two types of aircraft status indicators:

1. Front status indicators (Red).
2. Rear status indicators (Green).

- The red status indicators are used to identify the head of the drone.
- All aircraft status indicators can be turned on or off in the App settings.
- All the status indicator messages will be displayed on the remote controller screen.

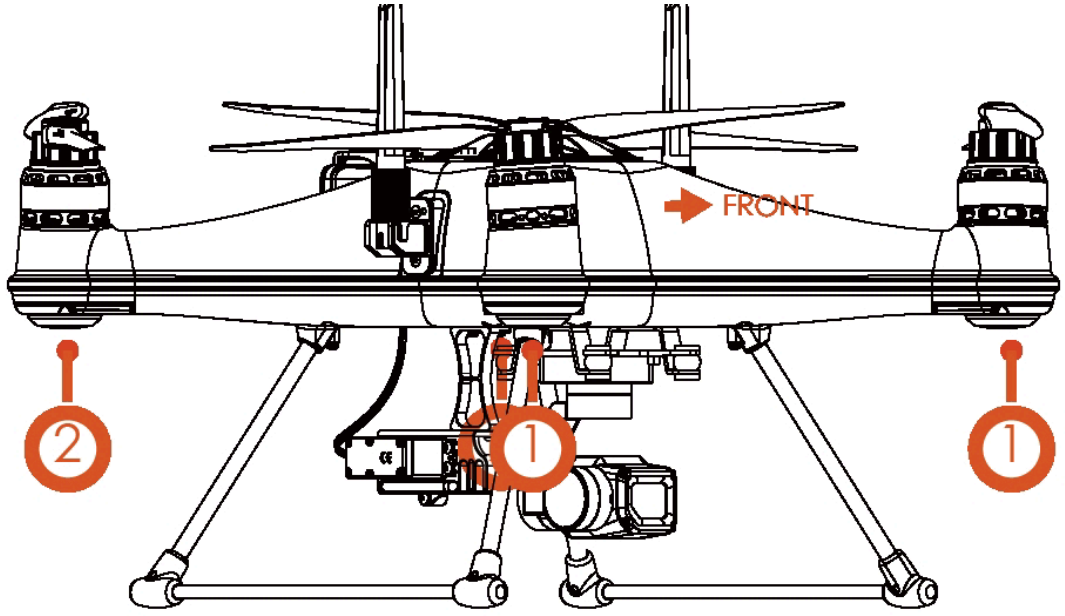

1. Front	2. Rear		
		Solid Red	**Front of aircraft**
		Red/Green Flash Alternatively	Perform self-diagnostic test
		Solid Red/Green Flash Quickly	Remote controller disconnected
		Red/Green Flash Quickly	Critical error (e.g. overload)
		Flash Red Quickly	Low battery warning (level 2)
		Flash Red Slowly	Low battery warning (level 1)
		Solid Red/Flash Green Slowly	No GPS signal
		Solid Green	Ready to fly

 ©2026 SwellPro All Rights Reserved

Intelligent Battery

Each slide-in SplashDrone 4+ battery has its battery management system, teamed with high-performance lithium cells to provide up to 28 minutes of flight time.

The SplashDrone 4+ intelligent battery provides:

- Integrated balance charging to ensure battery health, safety, and long life by monitoring battery health, state-of-charge, and temperature.
- Fast slide-in battery replacement. Integrated connectors allow for wire-free installation and replacement.
- Battery charging and usage data logging to allow for better battery management and event recording.
- Battery self-discharge storage function, ensuring battery safety during storage.

⚠ **To preserve battery health and ensure optimal activity during a storage period of three months, please fully charge and discharge the battery once before its subsequent storage.**

Powering On/Off the Battery

Press the power button once (the battery will beep once), then long-press the power button for three seconds. The battery will beep twice to indicate that it is turned on. The same applies to powering off the battery.

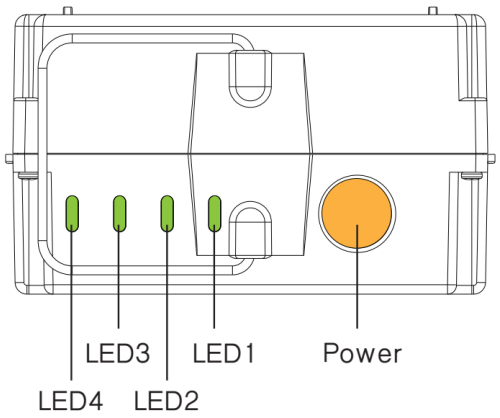

Battery Level

Press the power button once to check the battery level.

The battery level LEDs display the power level of the battery during discharge. The statuses of the LEDs are defined below:

©2026 SwellPro All Rights Reserved

LED1	LED2	LED3	LED4	Battery Level
Solid	Solid	Solid	Solid	88~100%
Solid	Solid	Solid	Flashing	76~87%
Solid	Solid	Solid		63~75%
Solid	Solid	Flashing		51~62%
Solid	Solid			38~50%
Solid	Flashing			25~45%
Solid				13~25%
Flashing				0~12%

Solid Flashing

Battery Warning Signs

LED1	LED2	LED3	LED4	Alarm Type
	blinks			Battery undervoltage alarm
		blinks		Battery overcurrent alarm
			blinks	Battery high-temperature alarm
blinks			blinks	Battery low-temperature alarm

blinks

Waterproof Barometric Membrane

The waterproof barometric membrane is a featured technology of SwellPro. It allows air to pass through the internal chamber of the aircraft to ensure the barometer's proper functioning, while keeping water out to maintain the SplashDrone 4+'s all-waterproof design. The waterproof barometric membrane is delicate yet essential to proper flying and waterproofing.

⚠
- Always check the barometric membrane to ensure no damage is observed before flying.
- Rinse the barometric membrane thoroughly with freshwater every time after flying.
- If you constantly fly your drone in saltwater (sea), it is recommended that you change the barometric membrane once **every two months**, since salt particles can clog the tiny holes on the membrane.
- If the aircraft is unstable during hovering or abnormal during ascent or descent, the barometric membrane might be damaged. Please replace it.

 ©2026 SwellPro All Rights Reserved

- **If the barometric membrane is damaged or worn, it must be replaced..**
- To replace the barometric membrane:
- Take out the top cover.

01 Peel off the old waterproof barometric membrane. Clean the surface barometric vent and ensure no residue on the surface.

02 Remove the 3M paper from the waterproof barometric membrane and press it firmly on the barometric vent to ensure a tight seal.

03 Put the top cover back.

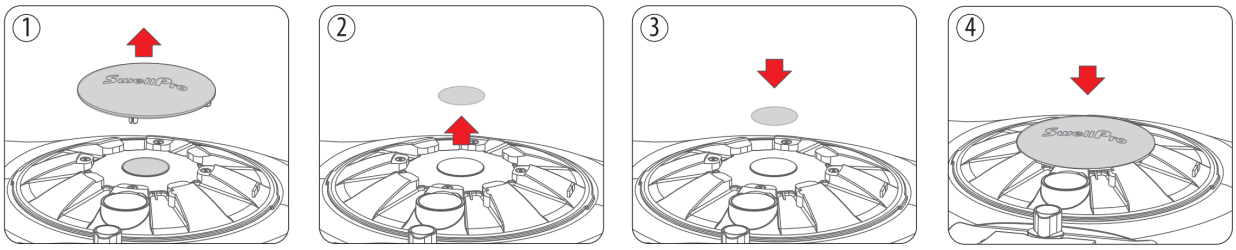

Gimbal camera

Gimbal Operation Modes

Two gimbal operation modes are available. Switch between the operation modes in Settings Control in SDFly3.

Follow Mode: The angle of the gimbal remains stable relative to the horizontal plane.Users can adjust the gimbal tilt.This mode is suitable for shooting stills.

FPV Mode: When the aircraft is flying forward,the gimbal synchronizes with the movement of the aircraft to provide a first-person flying experience.

- DO NOT tap or knock the gimbal after the aircraft is powered on.Launch the aircraft from open and flat ground to protect the gimbal during takeoff.
- The gimbal will be level when the aircraft is powered on,if the gimbal rotates, recenter the gimbal using the remote controller or SDFly3 as follows:
- Click "Pan/Tilt Center/Down" in the System Settings > Control Settings of the SDFly3 camera interface.
- Press the Customizable C2 Button on the remote controller (the default function recenters the gimbal and points the gimbal downward,this can be customized).
- Precision elements in the gimbal may be damaged by a collision or impact,which may cause the gimbal to function abnormally.
- Avoid getting dust or sand on the gimbal,especially in the gimbal motors.
- DO NOT apply external force to the gimbal after the gimbal is powered on.
- DO NOT add any extra payload other than an official accessory to the gimbal,as

©2026 SwellPro All Rights Reserved

this may cause the gimbal to function abnormally or lead to permanent motor damage.

- **Remove the gimbal protector before powering on the aircraft. Attach the gimbal rotector when the aircraft is not in use.**

- **Ensure the temperature and humidity (- 20 °C to 60 °C) are within suitable ranges for the camera during use and storage.**
- The cameras may not focus correctly in the following situations:
- Shooting dark objects far away.
- Shooting objects with repeating identical patterns and textures or without clear patterns and textures.
- Shooting shiny or reflective objects (such as street lighting and glass).
- Shooting flashing objects.
- Shooting fast-moving objects.
- When the aircraft/gimbal is moving fast.
- Shooting objects with varying distances in the focus range.

Payload release

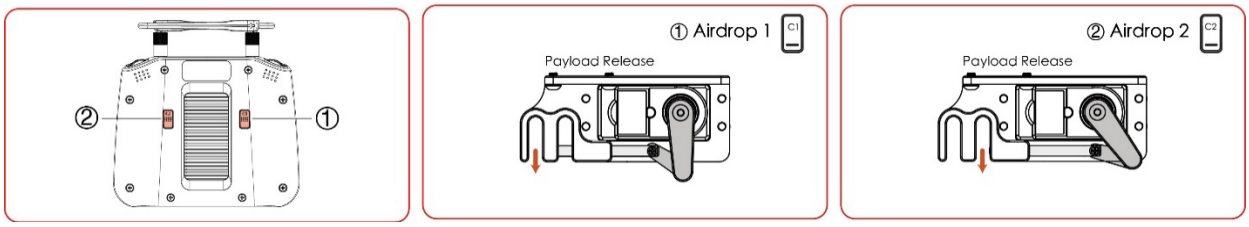

 ©2026 SwellPro All Rights Reserved

Remote Controller

The Splashdrone 4+ remote controller uses digital video transmission on 5.8 GHz, supporting real-time 720p at 30fps HD images. It has functional buttons for aircraft and camera operation within a 5km range (FCC version, unobstructed). It features a 5.5-inch 1920×1080p touch screen with up to 700cd/m² brightness. Powered by Android 10, it includes a tri-mode satellite module for GPS, Galileo, and BeiDou, and can connect to Wi-Fi.

The remote controller has a built-in speaker, supports HDMI display, and microSD expansion for storage, enabling easy file transfer. Its 3200mAh battery lasts about 2 hours.

Operation

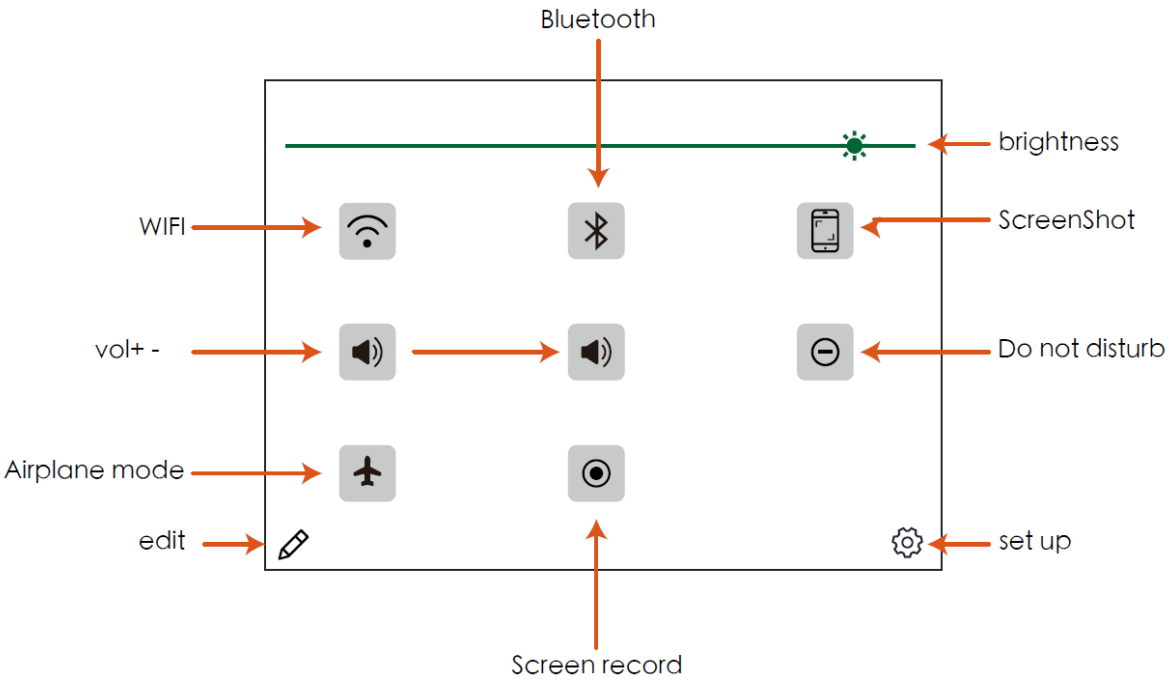

1. **WIFI:** Tap to turn Wi-Fi on or off. Hold to enter settings and connect to or add a Wi-Fi network.*Please turn off WiFi during the flight.*
2. **Bluetooth:** Tap to turn Bluetooth on or off. Hold to enter settings and connect with nearby Bluetooth devices.
3. **VOL+-:**Adjusting Volume
4. **Airplane mode:** Tap to enable Airplane mode. Wi-Fi, Bluetooth, and mobile data will be disabled.
5. **Brightness:** When the icon is highlighted, the screen is in auto brightness mode. Tap or slide the bar to switch to manual brightness mode.
6. **Screenshot:** Tap to screenshot the screen.

©2026 SwellPro All Rights Reserved

7. **Screen record:** Tap to start recording the screen. The screen displays the recording time while recording. Tap Stop to stop recording.
8. **DO NOT DISTURB:** To enable Do Not Disturb mode. In this mode, system prompts will be disabled.
9. **Set up:** Tap to access system settings.
10. **Edit**: Tap to move icon.

Remote Control Antenna

RC Antenna Blind Spot

The antenna's radiation pattern creates a blind spot about 40° beneath the aircraft. When under this area, the remote controller may lose signal. If you experience signal loss near the aircraft, you might be in the blind spot.

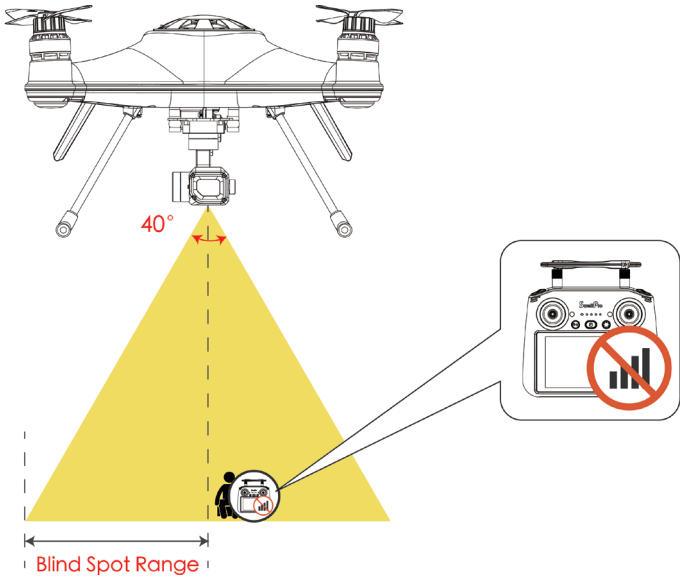

⚠ **Please avoid being in the blind spot zone to prevent the signal loss issue.**

- During take-off, try to fly the aircraft away from you instead of quickly ascending the aircraft into the overhead area near you.
- The same goes for Return-to-Home/Landing. Land the aircraft safely before you to avoid being in the blind spot area.

If you want to estimate the safe distance, use this equation $\boldsymbol{tan(20°)\ x\ Height}$ to calculate. (Height is the height of the aircraft, which can be obtained from the remote controller or the App)

Here is the estimated safe distance from the aircraft to prevent signal loss due to being in the blind spot area.

 ©2026 SwellPro All Rights Reserved

Aircraft Heigh	10 m	30 m	50 m	80 m	100 m	120 m
Safe Distance	4 m	11 m	18 m	30 m	37 m	44 m

Optimal Signal Transmission

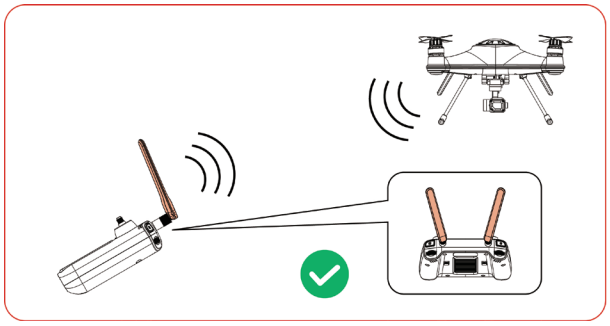

Position the antenna parallel to the aicraft for opitimal siganl transmission.

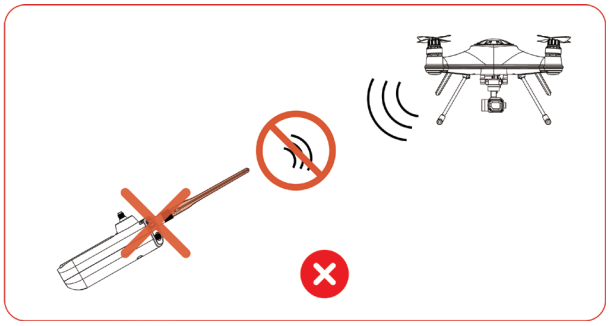

DO NOT point the tip of the antenna to the aircraft. Otherwise, it would result in signal lost.

Pairing The Remote Controller

Pairing

The remote controller and aircraft are pre-paired at the factory, so there's no need to pair them first. After turning on, they'll pair within a minute, though environmental interference might delay this.

⚠ **Only pair the remote when, after turning on the aircraft and remote for over 5 minutes, the remote signal still shows the Unpair sign.**

Please strictly follow the steps to pair.

1. Prepare the Aircraft: Keep the aircraft powered on. Remove the waterproof cover from the bottom of the aircraft (Fig. 1). Press and hold the Pairing Button (Fig. 1) for 3 seconds. The right indicator light on the aircraft's bottom will turn off, then turn back on and begin to flash.
2. Activate Aircraft Pairing Mode: Press the aircraft's Pairing Button once. The left indicator light on the bottom will begin to flash.
3. Prepare the Remote Controller: Keep the remote controller powered on. Open the waterproof plug on the bottom of the controller and use a pointed object to press the Pairing Button once (Fig. 3).
4. Complete the Pairing: Wait patiently for the process to complete. Once pairing is successful, the left indicator light on the aircraft's bottom will turn solid, and the right indicator light will be flashing.

©2026 SwellPro All Rights Reserved

To ensure the pairing process is successful:

- Please ensure you can see the light indicator at the bottom of the aircraft. If you can't see the light indicator, please take off the bottom plate so that you can see it.
- Please use a timer to count the time needed to press the pair button.

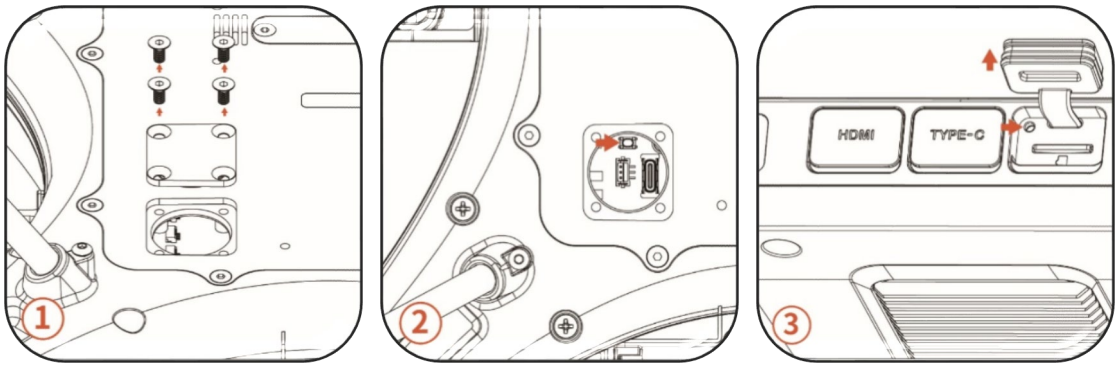

⚠ The pair button is delicate. Press the pair button gently to prevent unexpected damage to the button.

 ©2026 SwellPro All Rights Reserved

SDFly3 App

SDFly3, developed by SwellPro, marks a new era. It lets SplashDrone 4+ pilots view live HD video, tweak settings, plan missions with waypoints and maps, and browse, download, and share footage. The app only supports SplashDrone 4+ built-in remote controllers.

Home Screen

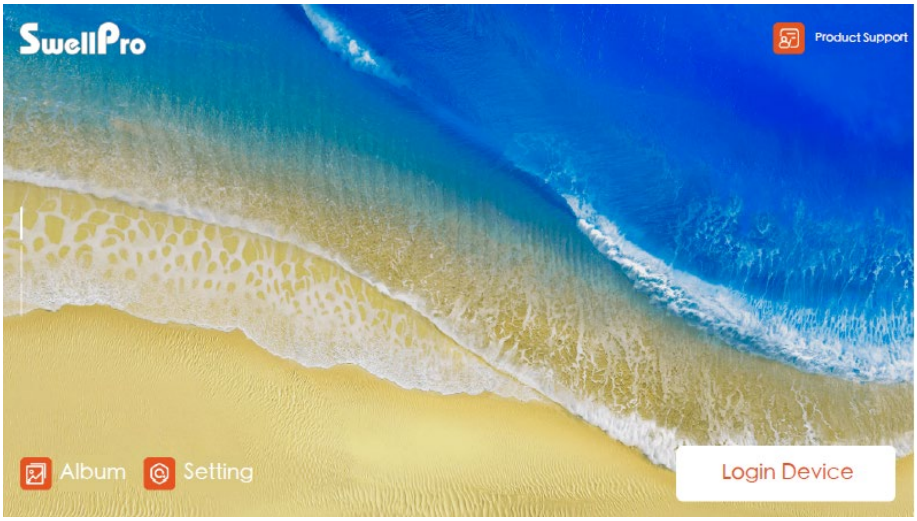

01 **Product support**

View product user manuals, tutorial videos.

02 **Album**

Browse the photos/videos taken from the camera.

03 **Setting**

APP basic settings.

04 **Login device**

Tap to enter the main interface.

-Orange - connected to aircraft.
-Gray - disconnected from aircraft.

©2026 SwellPro All Rights Reserved

Main Interface

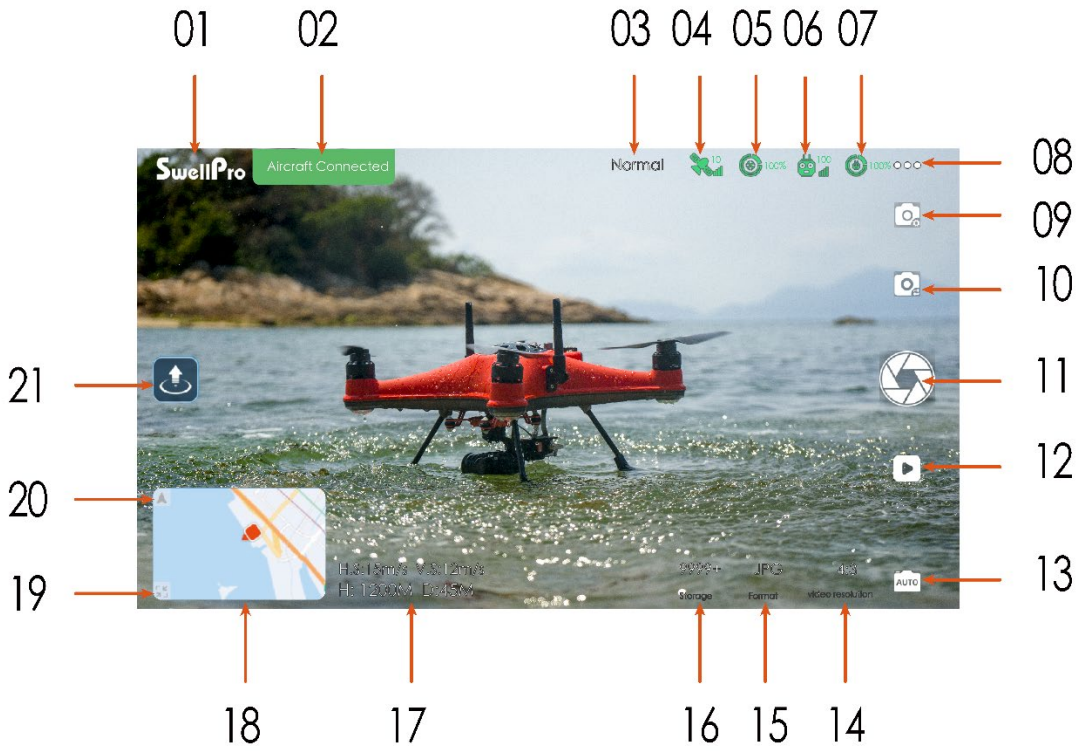

01 Home Screen

SwellPro Return to the main interface.

02 Aircraft Status

Displays the status of the aircraft.

03 Flight Mode

Display current flight mode. Tap to switch flight mode.

04 GPS Signal Level.

GPS signal quality

05 Aircraft Battery Level

Real-time display of the aircraft battery voltage.

06 Remote Controller Signal Level

The signal quality between the remote controller and the aircraft.

07 Remote Controller Battery Level

Real-time display of the battery voltage..

 ©2026 SwellPro All Rights Reserved

08 **Flight Settings**

Set the drone flight settings and configure flight parameters.

09 **Camera Settings**


Set camera parameters and settings

10 **Video**


Tap to record video and set the video.

11 **Shutter/Record Button**


Tap to take a photo/recording. Long press to slide and adjust the camera zoom level.

12 **Playback**


Tap to enter playback and preview photos and videos as soon as they are captured.

13 **Camera Modes Switch**



Tap to switch between Auto and Pro mode. Different parameters can be set in different modes.

14 **Photo size**

15 **Photo format**

16 **Storage Information**

Displays the remaining number of photos or videos recording time of the current storage. Tap to view the available capacity of the microSD card or the aircraft's internal storage.

17 **Flight Parameters**

D: Distance between the aircraft and the home point | H: Aircraft height from Home Point | HS: Aircraft horizontal speed | VS: Aircraft vertical speed

18 **Thumbnail map**

Tap to switch to the map interface quickly.

19 **Smart Scale**

Tap the +/-icon to zoom in or out slightly.

20 **Locked to North**

North is locked on the map, pointing upward in the map view. Tap to switch from Lock to North to the remote controller orientation, where the map rotates when the remote controller changes the orientation.

21 **Tap to take off**

Tap to auto take off and hover at a height of 3 m.

©2026 SwellPro All Rights Reserved

Map Interface

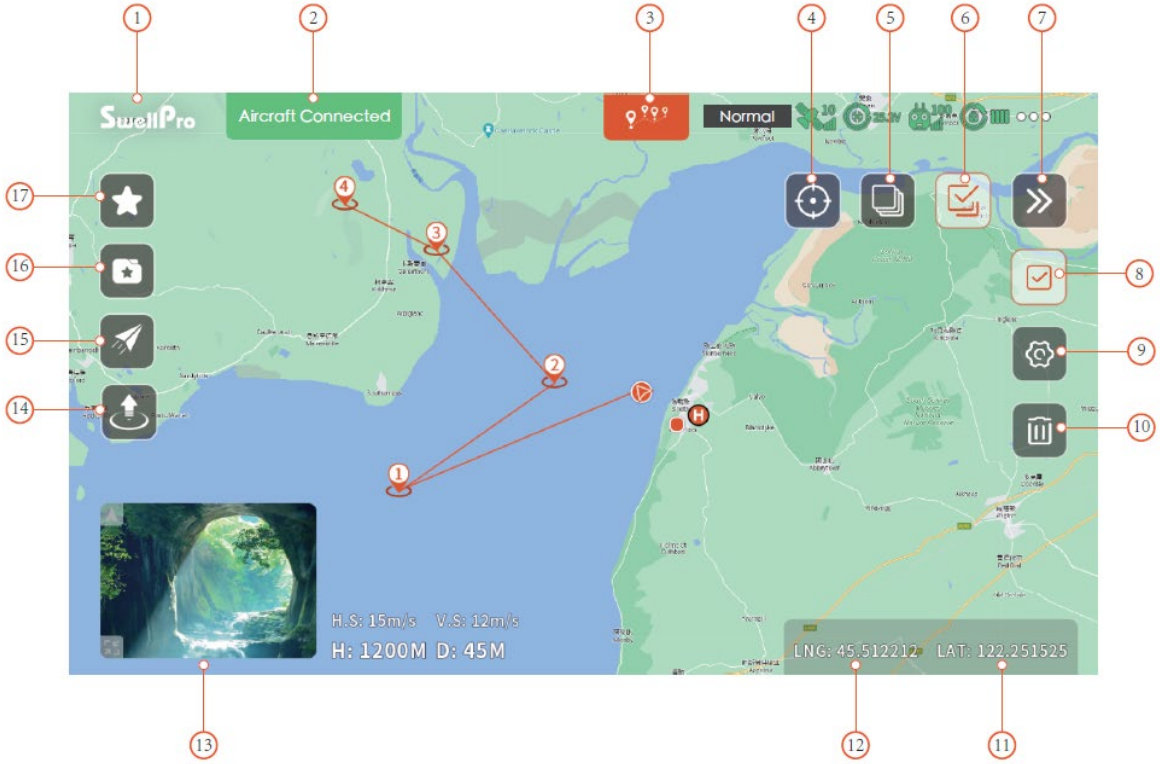

01 **Home Screen**

SwellPro Return to the main interface.

02 **Aircraft Status**

Displays the status of the aircraft.

03 **Task mode**

Displays the current flight task. Tap to switch flight tasks (Waypoint flight, Mapping flight, Circle mode).

Tap to fly	Tap where you want to fly to on the map, and the SplashDrone 4+ will automatically fly to the location and hover. You can also manually enter longitude and latitude and set altitude and speed.
Waypoint flight	Select several waypoints on the map; the SplashDrone 4+ will fly in a route through the series of waypoints. The height and speed can also be set for each waypoint.
Circle mode	Orbit combines orbit mode with Tap to Fly. Pilots can set a point on the map and its radius. The drone will fly to the point

 ©2026 SwellPro All Rights Reserved

	and start orbiting. The orbit radius, speed, and laps can be set on the App.

04 **Location**

Tap to quickly identify the location of the remote controller, take-off point, and aircraft on the map.

05 **Map Layer**

Pilots can choose from 3 map layers: Standard, Satellite, and Dark.

06 **Interest management**

07 **Hide icons**

08 **Select/multiple-select**

09 **Point of interest setting**

Setting height, speed, and Longitude and Latitude of the points.

10 **Delete**

Tap to delete the set point on the map.

11 **Longitude of the aircraft**

12 **Latitude of the aircraft**

13 **Thumbnail Screen:**

Tap to switch between camera and map views.

14 **Tap to take off**

15 **Execute:**

Tap to execute mission planning (Tap to fly, Waypoints, circling).

16 **Route Saved**

Access and perform the saved points.

17 **Save**

Save the points on the map for later use (recurring tasks).

©2026 SwellPro All Rights Reserved

Setting

Safety

Fight setting

- Return to Home (RTH): tap to set Advanced RTH, Auto RTH Altitude, and to update the Home Point.
- Failsafe measures: RTH, hover, landing.
- Flight Distance

Assistance

- Data display and shutdown
- Flight indicator LEDS control
- Remote controller custom buttons. C1 (Single release), C2 (Full release)

Control

- Toggle units between metric/imperial
- PTZ settings include PTZ mode (tracking mode, FPV mode), PTZ tilt speed, PTZ return to center/down, and PTZ reset.
- Remote control: including joystick calibration entry, aircraft voice toggle, and voice volume adjustment.

Camera

- Camera Parameter Settings: displays different settings according to the shooting mode.
- The thermal mode is only for the G04 camera.

Shooting mode	• Settings
Photo mode	• Format, Aspect Ratio
Record mode	• Format, Aspect Ratio
Thermal mode	• Temperature OSD, temperature unit, IR color, palette, crosshair, temperature alarm switch

- General Settings: EIS Electronic Shake Reduction, Image Watermark, Scene Mode, Special Effects Mode, Format Memory Card

Other

- Device Information: Device name, product name, APP version, firmware version, aircraft SN code, black box data viewing and management.

 ©2026 SwellPro All Rights Reserved

Appendix

Specifications

Aircraft	
Waterproof Rating:	IP67
Weight:	2430g(include battery and propellers)
Axis Diameter:	450 mm
Size:	372.2*372.2*230.6mm
Max Ascend Speed:	3 m/s
Max Descend Speed:	2 m/s
Max Flight Speed:	18 m/s(Sport), 10 m/s(Normal); 3 m/s(Cine)
Max Tilt Angle:	30°
Max Altitude from Takeoff Point:	120m
Max Wind Speed Resistance level :	Level 5
Max Flight Time:	29 mins (no wind & no load); This endurance time was measured under controlled test conditions. (Hover at sea level in a windless environment, recording turned off.)
Hovering Precision:	±0.5 m (vertical); ±0.5 m (horizontal)
Max Flight Distance:	7.0 km
Max Payload Capacity:	2000g (Include payload accessories)
Max Take-off Weight	4180g
Propellers:	#12-inch carbon fiber quick-release propellers
Operating Frequency:	5180 - 5875 MHz; 5745 - 5825 MHz

©2026 SwellPro All Rights Reserved

	The 5180 MHz to 5240 MHz range is only used in some countries and regions where regulations permit.
Transmitter Power (EIRP):	**5.1 GHz:** <23 dBm (CE) **5.8 GHz:** <33 dBm (FCC); <30 dBm (SRRC); <14 dBm (CE)
Working Temperature:	-10℃ ~ 60℃
Satellite Positioning Systems:	GPS+Galileo+BeiDou
UART (SDK):	Allows for a TTL serial port to TCP, with the baud rate of 115200

Remote Controller	
Waterproof Rating:	IP67
Operating Frequency:	5180 - 5875 MHz; 5745 - 5825 MHz 5180 MHz to 5240 MHz are only used in some countries and regions where regulations permit.
Transmitter Power (EIRP)	5.1 GHz: <23 dBm (CE) 5.8 GHz: <33 dBm (FCC); <30 dBm (SRRC); <14 dBm (CE)
Real-time Video Transmission:	720P@30fps
Battery:	2S 3200mAh
Working Time:	About 150 mins
Working Voltage:	7.4V
HDMI Port:	720P high-definition video output
Type-C Port:	Firmware upgrade / Flight Log data read/charging
Screen:	5.5 inch, 1920*1080； 700ccd
System:	Android

 ©2026 SwellPro All Rights Reserved

Working temperature:	-10℃ - 40℃
Remote Charging time:	About 150 mins
Power Input:	5V/3A

Intelligent battery(IB4+)	
Nominal Capacity:	4500mAh
Voltage:	22.2V
Type:	Intelligent Battery
Watt Hours:	99.9Wh
Size:	154.8*80*49.5mm
Weight:	820g
Working Temperature:	-10°C - 60°C (discharge); 0°C - 45°C (charge)
Storage Temperature:	0℃ - 25℃
Charging Time:	120mins
Max Charging Current:	8A
Charger	
Input	220V, 50/60Hz
Output:	25.2V 5.9A
Rated Power:	150W
App	
Mobile App Name	SDFly3
Live View Quality	720p@30fps

Battery Care and Maintenance

- Strictly prohibit the battery from contacting any liquid, including but not limited to water, beverages, or oils.
- Do not immerse the battery in water or allow it to become wet.

©2026 SwellPro All Rights Reserved

- Never use the battery in rain or damp environments. Internal contact with moisture may cause decomposition, leading to spontaneous combustion or explosion.
- Strictly prohibit the use of swollen, leaking, or damaged batteries. Dispose of any battery exhibiting these conditions properly according to the disposal method outlined in this document.
- The operating ambient temperature range for the battery is -10°C to 40°C. Usage in environments exceeding 60°C may cause fire or explosion. Usage below -10°C may cause permanent damage.
- Disassembling or piercing the battery in any way is forbidden, as this may cause fire or explosion.
- The internal electrolyte is highly corrosive. In case of leakage, keep clear. If electrolyte contacts skin or eyes, flush immediately with clean water for 15 minutes and seek immediate medical attention.
- If the battery is accidentally submerged, retrieve it immediately and place it in a safe, open area. Keep away from the battery until it is completely dry. Do not reuse a dried battery. Dispose of it according to the specified method in this document.
- In case of battery fire, use a Class D fire extinguishing agent, such as sand, a fire blanket, dry powder, or a CO_2 extinguisher.
- Do not place the battery in a microwave, pressure cooker, or any equipment that may generate high temperatures or pressure.
- Do not place the battery on conductive surfaces, such as metal tables.
- Never short-circuit the battery's positive and negative terminals with wires or any other metal objects.
- Avoid dropping or subjecting the battery to impact.
- Do not place heavy objects on the battery or charger.
- If the battery connector is soiled, wipe it clean with a dry cloth. Contamination can cause poor contact, leading to operational failure or charger damage.
- Upon triggering the Level 1 Low Battery warning, execute a safe Return-to-Home procedure immediately. Continued flight after the Level 2 Low Battery warning is triggered may severely damage the battery. Proceed with extreme caution.

Battery Charging

- The aircraft battery must be charged only with the designated charger provided by SwellPro. SwellPro shall not be held liable for any consequences resulting from the use of unauthorized chargers.
- The charging process must be supervised at all times to monitor the status and prevent potential incidents.
- During charging, place the battery and charger on a non-combustible surface, such as concrete, and ensure the surrounding area is clear of flammable materials.

 ©2026 SwellPro All Rights Reserved

- Disconnect the battery from the charger once charging is complete. Disconnect the charger from the power source when not in use.
- Never clean the charger using alcohol or other flammable solvents.
- The battery will be hot after use. Always wait for it to cool to the ambient charging temperature (0°C to 40°C / 32°F to 104°F) before connecting the charger.
- Do not use a charger that shows any signs of damage.
- Do not charge the battery in any potentially explosive atmosphere, including fueling areas, or areas containing chemicals or particulates (such as dust or metal powders).

Precautions for low-temperature use

- When the battery is used in a low-temperature environment (-10°C to 5°C), the battery capacity and flight time will be drastically reduced. It is recommended to take off when the battery is fully charged. Please fully charge and keep the battery warm before use.
- In a low-temperature environment, it is recommended to preheat the battery to above 5°C before flying, and it is better to preheat it to above 25°C.
- Before flying in a cold environment, insert the battery into the aircraft to warm up for 1 to 2 minutes, and take off after the battery is fully warmed up.
- In low-temperature environments, battery output power will be reduced, which diminishes the aircraft's wind resistance. Please fly with caution.
- Be aware that aircraft performance is reduced when operating at high altitudes and in low temperatures. Always fly with extreme caution under these conditions.

Battery Storage and Transportation

- The aircraft battery must be charged only with the designated charger provided by Swell Pro. Swell Pro shall not be held liable for any consequences resulting from the use of unauthorized chargers.
- The charging process must be supervised at all times to monitor the status and prevent potential incidents.
- During charging, place the battery and charger on a non-combustible surface, such as concrete, and ensure the surrounding area is clear of flammable materials.
- Disconnect the battery from the charger once charging is complete. Disconnect the charger from the power source when not in use.
- Never clean the charger using alcohol or other flammable solvents.
- Do not use a charger that shows any signs of damage.
- Do not charge the battery in any potentially explosive atmosphere, including fueling areas, or areas containing chemicals or particulates (such as dust or metal powders).

©2026 SwellPro All Rights Reserved

Battery Disposal

- Dispose of the battery in specific recycling boxes only after a complete discharge.
- DO NOT place the battery in regular trash containers. Strictly follow your local regulations regarding the disposal and recycling of batteries.

Inspection

Fuselage

- Check the exterior, especially for the gaps and screws.
- Make sure that the arm and landing gear are not damaged.
- Make sure the battery cover is tightly sealed to prevent the battery from falling off or water from getting in during the flight.
- Make sure that all connectors at the bottom of the aircraft are tightly sealed to prevent falling off or water getting in during the flight.
- Keep the fuselage and battery sealing clean and dust-free. Sand or other mid-size particles might affect proper waterproof sealing.
- Make sure that the sealings have no defects or breaks. If required, light lubricant (Vaseline or silicone oil) can be applied to the sealing ring area.

Battery

- Check the exterior of the battery. If the battery is swollen, leaked, or cracked, replace the battery, and dispose of the damaged battery properly in a proper battery disposal manner.
- Make sure the battery does not move or come off after installation.
- Before each flight, fully charge the battery.
- During the flight, make sure the battery level is sufficient to complete the flight.
- Make sure that the battery plug is not bent, cracked, or blocked.
- Make sure the battery connector is clean. If the pins appear to be oxidated (look greenish or rusty), replace the battery.

Motor

- Check the exterior of the motor to see if there are any damages.
- Rotate the motor to check if there is any obvious resistance to turning the motor.
- Start the motor without installing the propeller, and check if there are any abnormal noises.
- Make sure that the motor and the arm screws are securely installed.
- Check the motor gap for any salt or other residuals. Rinse and clean thoroughly with water.

 ©2026 SwellPro All Rights Reserved

- Check the propeller mount on the motor to see if it is loosened or damaged. Fasten the screws if the propeller mount is loosened. Replace the propeller mount if it is damaged.

Propeller

- Check the exterior of the propeller. If there are breakages, cracks, or creases, replace the propeller.
- Be aware of the A/B mark both on the propellers and the motors and make sure that the propellers are installed correctly accordingly.
- Check the symmetry of the propellers. Start the motor and observe the propeller's rotation. If the propellers on the diagonal sides rotate in a different direction and are accompanied by severe vibrations, replace the propellers.

Maintenance And Store

Daily Maintenance

- After flying the aircraft out to the ocean, please rinse the aircraft with clean fresh water right away, especially for the motor to prevent the formation of salt and other residuals.
- If salt and other residuals are being observed, soak the part in clean freshwater thoroughly (under 20mins) and clear out the residuals.
- If the aircraft is wet, wipe away the water before you open it and take off the battery to avoid water dripping into the battery compartment.
- Keep the aircraft clean, especially the lens. Recommend using a soft cloth and fresh water to clean the aircraft. Do not use any corrosive cleaning solution.
- Keep water, dust, or other particles from entering the aircraft.
- Avoid prolonged exposure to the sun.
- When not in use for a long period, store the aircraft in a cool, dry, and ventilated environment, best at a temperature between 20°C - 28°C, and humidity between 40%-60%.

Store and Transport

- Before putting the aircraft into storage, turn off the power, take off the battery, and clean the aircraft.
- Store all the aircraft parts and accessories together.
- Store the aircraft in a dry, ventilated, cool temperature (20°C - 28°C).
- If the flight battery is not being used for a long period, ensure to set the battery to store voltage (22.8V~23.2V). To prevent the battery from over-discharge, charge the flight battery to store voltage every 3 months.

©2026 SwellPro All Rights Reserved

- If the remote controller is not being used for a long period, ensure to fully charge the remote controller (battery level on the top right of the screen) for storage. To prevent the battery from over-discharge, fully recharge the remote controller every 3 months.
- **Do not leave both the flight battery and remote controller battery unattended for a long period (longer than 3 months).** As the battery discharges over time, long storage time without recharge would result in battery over-discharge and permanent damage to the battery.

FCC Caution

This device complies with part 15 of the FCC Rules. Operation is subject to the following two conditions:(1) This device may not cause harmful interference, and (2) this device must accept any interference received, including interference that may cause undesired operation.

Any Changes or modifications not expressly approved by the party responsible for compliance could void the user's authority to operate the equipment.

Note: This equipment has been tested and found to comply with the limits for a Class B digital device, pursuant to part 15 of the FCC Rules. These limits are designed to provide reasonable protection against harmful interference in a residential installation.

This equipment generates uses and can radiate radio frequency energy and, if not installed and used in accordance with the instructions, may cause harmful interference to radio communications. However, there is no guarantee that interference will not occur in a particular installation. If this equipment does cause harmful interference to radio or television reception, which can be determined by turning the equipment off and on, the user is encouraged to try to correct the interference by one or more of the following measures:

-Reorient or relocate the receiving antenna.

-Increase the separation between the equipment and receiver.

-Connect the equipment into an outlet on a circuit different from that to which the receiver is connected.

-Consult the dealer or an experienced radio/TV technician for help.

This equipment complies with FCC radiation exposure limits set forth for an uncontrolled environment. This equipment should be installed and operated with minimum distance 20cm between the radiator your body.

Version Information

SwellPro products and user manuals are constantly improving.

 ©2026 SwellPro All Rights Reserved

Visit support.swellpro.com to check and download the latest user manual.

Version

1.0.0 SplashDrone 4+ User Manual 1.0 Edition1.0.0

1.0.1 UpdateSpecifications.

1.0.2 Update Pre-Flight Checklist and remote controller Wi-Fi instructions.

1.0.3 **Updated:** Flight Modes, Pairing function; **Added:** TOF, Follow Me Mode, Compass Calibration

©2026 SwellPro All Rights Reserved