Fisherman FD3

User Manual



SwellPro

Visit https://www.swellpro.com/pages/support-center for the latest version of manuals and firmware.

Fisherman FD3

Model：FD3

v1.1.9-2026.05

Thank You

Thank you for purchasing the Fisherman FD3. We have designed and manufactured the Fisherman FD3 to the highest quality standards.

Like any marine equipment, long-life and trouble-free operation rely on correct care and maintenance. With proper care and maintenance, you should enjoy your aircraft for many years. After flying in salt or contaminated water, always thoroughly rinse your Fisherman FD3 in fresh water immediately after use or before salt and sediment can dry inside moving parts.

It is important to familiarize yourself with the features of this unique aircraft by carefully studying this manual and particularly the priority sections indicated in the Table of Contents.

Visit https://www.swellpro.com/pages/support-center for the latest manuals, software, and tips. Refer to the Version Information section at the end of this manual, which details additions and corrections to this manual.

Using this Manual

This document is designed to be printed or viewed on a computer or mobile device. If used electronically, you can search directly for terms like "Battery" to find references. Additionally, you can click on any topic in the Table of Contents to navigate directly to that topic.

FAQ

The user manual is the best companion while using the product. For the specific problem using the product, the FAQ can be another great resource for you to look at. Go to the SwellPro website, look for support >product support > FAQ to find the FAQ page.



https://www.swellpro.com/pages/support-center

Copyright ©2026 SwellPro All Rights Reserved

Video Tutorials

Visit and subscribe to the SwellPro YouTube Channel for tutorial videos and product information. Scan this QR code with your camera phone to go to our channel.

Social Media

Join our Facebook page to meet other people who share their adventures with SwellPro.
www.facebook.com/SwellPro/

Firmware Update

SwellPro products are constantly improving. We recommend you visit https://www.swellpro.com/pages/support-center to check and update the latest firmware for your product.

Basic and Advanced Version

Fisherman FD3 has two versions: Basic and advanced version

VERSION	CAMERA	REMOTE CONTROLLER
BASIC VERSION	No Camera	Basic Remote Controller (no image)
ADVANCED VERSION	4K Gimbal Camera	Advanced Remote Controller

The basic version cannot be upgraded into the advanced version.

Copyright ©2026 SwellPro All Rights Reserved

Content

Thank You 2
Using this Manual 2
FAQ 2
Video Tutorials 3
Social Media 3
Firmware Update 3
Basic and Advanced Version 3
Content 4
Aircraft 6
Aircraft Diagram 6
Aircraft Status Lights 7
Install 8
Install Propeller 8
Adjust Antenna 9
Install/Remove Flight Battery 9
Power ON/OFF 10
Flight Battery 11
WARNING 11
Battery Capacity 11
Charging 12
Battery Check 13
Battery Repair 14
Battery Storage 15
Barometric Membrane 15
Remote Controller 17
Remote Controller Diagram 17
Remote Controller Screen 18
Advanced Version 18
Basic Version 19
RID Displays Information 20
Remote Controller Status Lights 21
Display Settings 21
Turn ON/OFF 22
Adjust Settings Menu 22
Phone Mount(No need to install if you don't use the APP) 23
Install 23
Use 23
Image Transmission Settings 23
Power ON/OFF 24
Charging 25
Pairing 25
Control Sticks Calibration 26
Optimal Signal Transmission 27
Remote Controller Antenna Orientation 27
Aircraft Antenna Blind Spot 27
Reset Wi-Fi Password 29
Flight 30
Flight Safety and Environment 30
Flight Restrictions 31

Copyright ©2026 SwellPro All Rights Reserved

Pre-Flight Checklist 31
Basic Flight Steps 32
Control the Aircraft 32
Starting and Stopping the Motors (Arming) 33
Starting (Arming) Motors 33
Stopping Motors 34
Stopping Motors Mid-flight 34
Takeoff and Landing 34
Takeoff 34
Landing 35
Flight Modes 35
Low Battery Warnings 36
Level 1 Low Battery Warning 36
Level 2 Low Battery Warnings 36
Return to Home 36
RTH Height 37
Failsafe RTH 38
Low Battery RTH 38
Low Battery Payload Release 38
Low Battery Landing 38
Water Takeoff and Landing 39
Boat Takeoff and Landing 39
PowerFlip 39
Gimbal Camera 41
Control 41
Camera Control 41
Gimbal Control 41
Camera Settings 42
Photos Setting 43
Videos Setting 43
Gallery 43
Camera Setting 44
Camera Status Lights 45
microSD Card 45
Payload Release 47
Appendix 48
Specification 48
Warranty Information 51
Battery Care and Maintenance 51
Precautions for low-temperature use 52
Battery Charging 52
Battery Storage and Transportation 52
Battery Disposal 53
Maintenance 53
Disclaimer and Warning 53
FCC Caution 55
Version Information 55

 Copyright ©2026 SwellPro All Rights Reserved

Aircraft

Aircraft Diagram

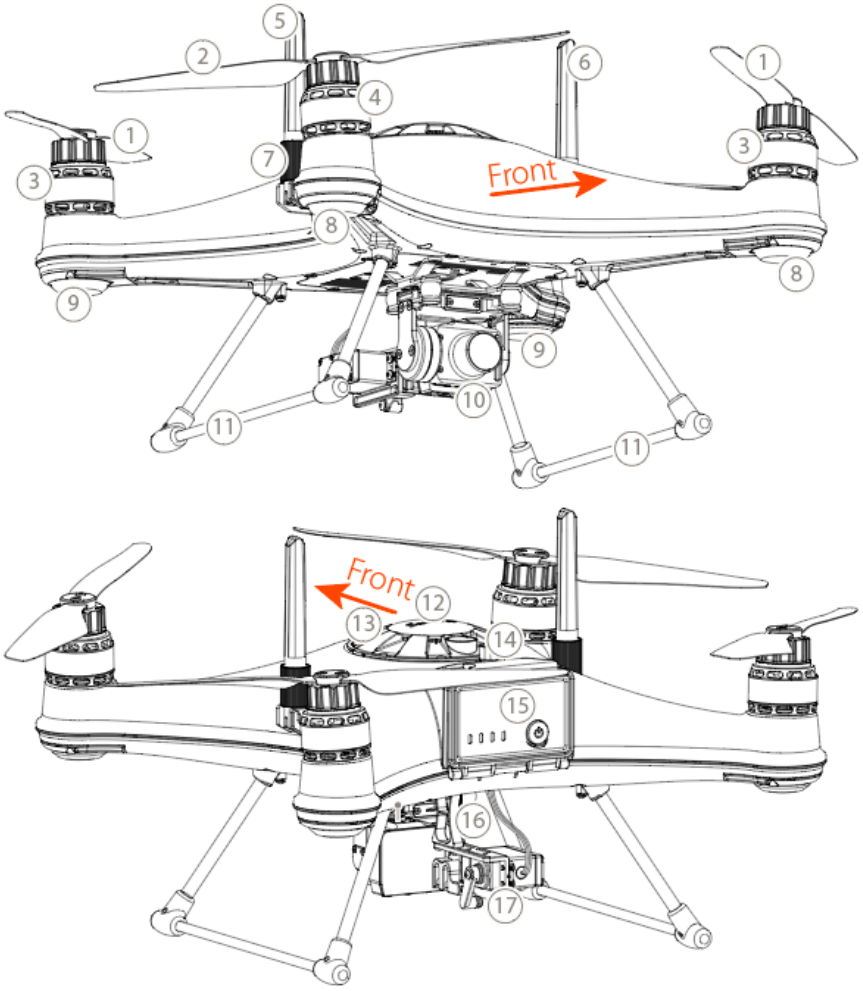

1. Propeller A
2. Propeller B
3. Motor A
4. Motor B
5. 5.8G Antenna
6. 2.4G Antenna
7. Antenna Mount
8. Front Arm Light
9. Rear Arm Light
10.Gimbal Camera (GC1-M)
11. Landing Gear
12. Barometric Membrane cover
13. GPS Cover
14. Battery Hatch Lock
15. Battery Hatch
16.Payload Release Holder Plate
17.Payload Release Mechanism

Aircraft Status Lights

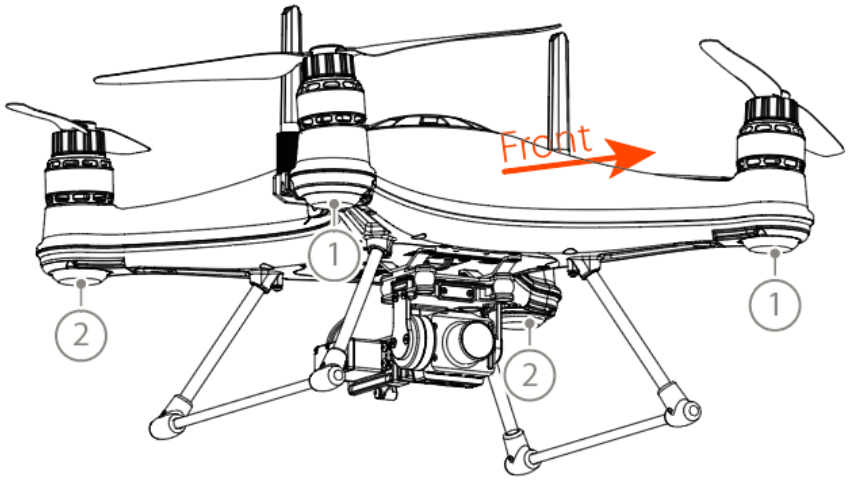

1. Front	2. Rear		
		Solid Red	Front of aircraft
		Red/Green Flash Alternatively	Perform self-diagnostic test
		Flash Green Quickly	Remote controller disconnected
		Red/Green Flash Quickly	Critical error (e.g. overload)
		Flash Red Quickly	Low battery warning (level 2)
		Flash Red Slowly	Low battery warning (level 1)
		Flash Green Slowly	No GPS signal
		Solid Green	Ready to fly

Copyright ©2026 SwellPro All Rights Reserved

Install

Install Propeller

There are two pairs of propellers **A/B**.

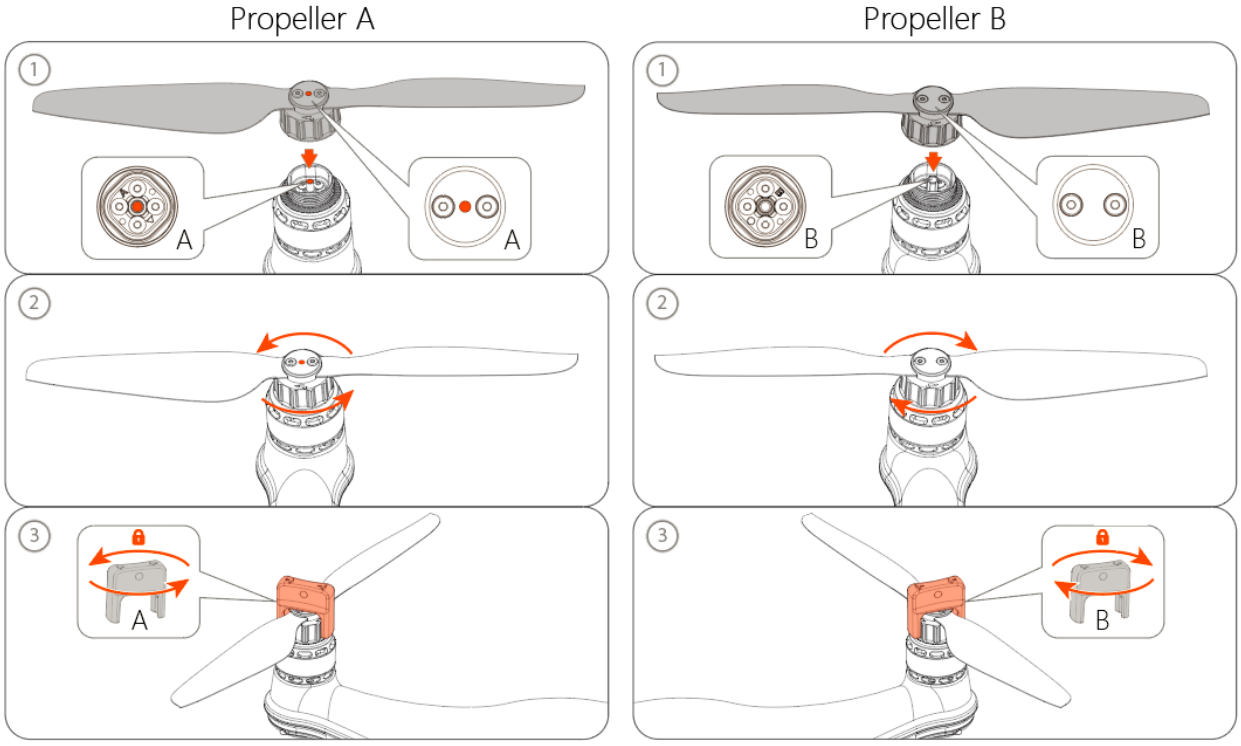

1. Place propeller A on motor A. /Place propeller B on motor B.
2. Hold the motor firmly with one hand, rotate the propeller nut with the other hand.
3. Lock the propeller nut with the in-the-box tool shown above(When disassembling, please use the tool to loosen the nut first).

⚠ **Always place one hand under the motor to support it when installing or removing propellers. Failure to provide this support could result in bending or breaking the landing gear.**

⚠ **The propellers are sharp, please be careful to avoid injury.**

⚠ **Do not use broken propellers. Replace the propeller if there is any damage or wear to the propeller.**

⚠ **Ensure there is no wobble on the propeller after you install it. If you correctly install the propeller, the propeller still wabbles, you might need to tighten the screws on the propeller base.**

⚠ **Before each flight, please check that the propellers are smooth all over and are correctly installed and securely fastened. Spin each propeller by hand to check that the motors are free of sand or salt and spin freely.**

Copyright ©2026 SwellPro All Rights Reserved

Adjust Antenna

Adjust the antenna's orientation to ensure a stable connection for your flight. To adjust the antenna: Loosen the fixing nut, adjust the antenna position, and then tighten the fixing nut again.

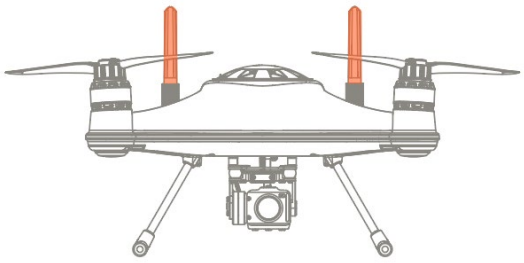

Antenna oriented upward: Improves reception when the aircraft is flying close to the water surface. (Use this atenna orientation if you plan on landing on water)

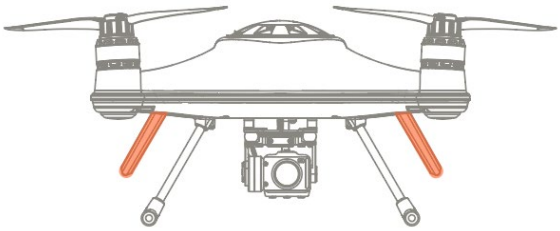

Antenna oriented downwards: Improves reception when the aircraft is flying at a high altitude.

Install/Remove Flight Battery

The flight battery is quick and easy to change.

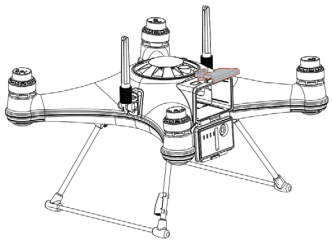

1. Unlock and open the waterproof hatch

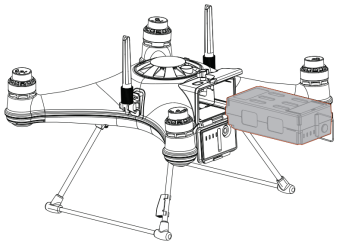

2. Slide in the fully charged intelligent battery and push it firmly into the battery slot

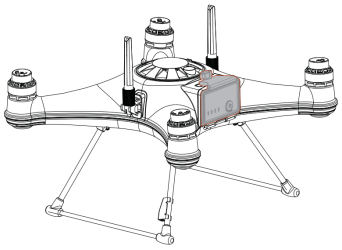

3. Close the battery hatch.

Fasten the catch and then lock the hatch



When slide in the battery, ensure to firmly press the battery into the battery slot to prevent water ingress.

Copyright ©2026 SwellPro All Rights Reserved

⚠ When slide in the battery,please ensure to firmly press the battery into the battery slot to prevent the problem of poor battery contact when the aircraft is flying.

⚠ Always check to ensure that the waterproof seal on the hatch door is clean and lightly lubricated.

⚠ The drone is no longer waterproof when the battery hatch is open. Do not allow water or sand to enter the drone while the battery hatch is open.

⚠ The Appendix of this manual contains additional warnings and precautions regarding the batteries, safety, charging, and maintenance. Please familiarize yourself with all the information.

Power ON/OFF

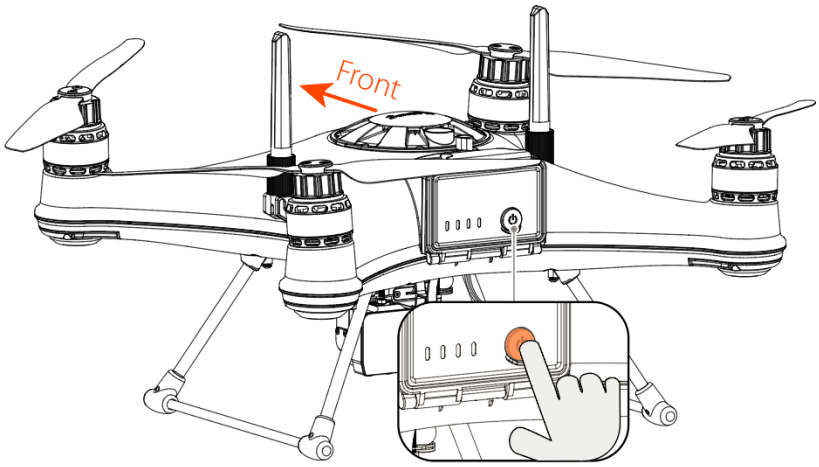

Power on/Power off: Shortly press the power button once then long press the power button for two seconds. Same for powering off the battery.

💡 Power on: The arm light and GPS light will light up, and the motors will make a "beep" self-check sound to turn on.

💡Power off: The arm light and GPS light will be turned off, and after about 3 seconds, the battery indicator light will be turned off one by one to power off.

Copyright ©2026 SwellPro All Rights Reserved

Flight Battery

Ensure to charge the battery right after you receive the product to prevent the possible battery over-discharge during shipping.

WARNING

- **Keep batteries AWAY FROM WATER AND DUST.**
- **Store batteries in a DRY, COOL place.**
- **DO NOT use swollen, leaking, damaged, batteries.**
- **STOP USING the battery when the battery slots show any signs of burn (blackening) or corrosiveness.**
- **DO NOT charge the battery in any area with a potentially explosive atmosphere, including fueling areas or areas which contain chemicals or particles such as grain, dust, or metal powders.**

Battery Capacity

The battery level LEDs on the battery pack allow you to check the state of charge of the battery quickly and accurately(As the picture)

Operation method: Short press the power button and the LED light will light up to indicate the battery level (After about 3 seconds, the indicator light will automatically go off one by one).

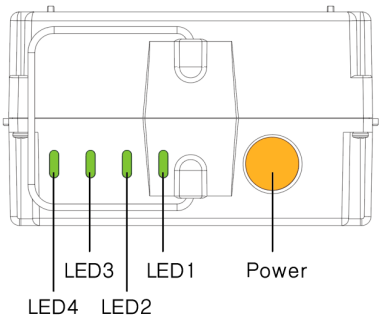

LED4	LED3	LED2	LED1	Battery Level
▮	▮	▮	▮	75~100%
▮	▮	▮	▯	50~75%
▮	▮	▯	▯	20~50%
▮	▯	▯	▯	<20%

▮ Solid

⚠ When the battery level indicates <20%, please charge the battery as soon as possible.

Copyright ©2026 SwellPro All Rights Reserved

Charging

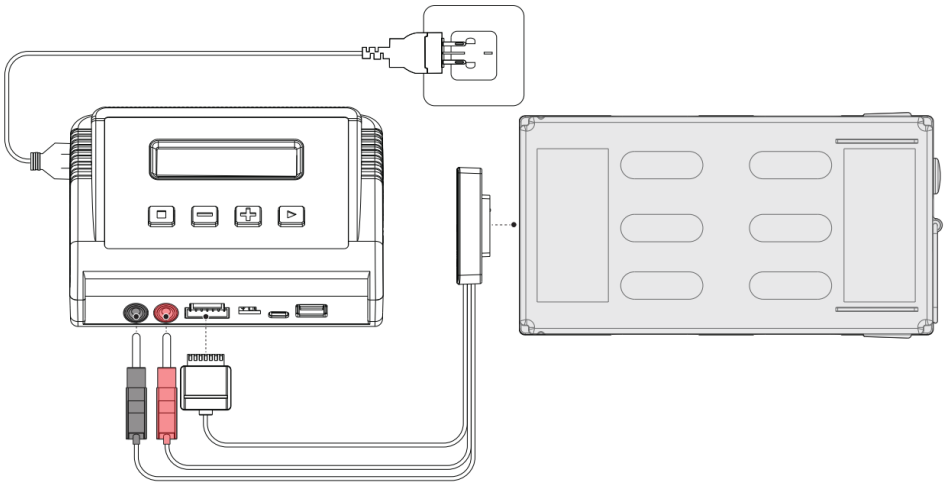

⚠ This charger is suitable for FD3 and FD1+! Do Not charge Fisherman Max battery!

The charger and charging cable of Fisherman MAX and Fisherman FD3/FD1+ has same apperance, they cannot mix and use. Because the Fisherman FD3 charger is a high-voltage charger, when use a high-voltage charger to charge the low-voltage Fisherman MAX battery, it can cause the Fisherman MAX battery to overcharge or even explode. The manufacturer is not responsible for the consequences caused by mixing

1. Connect the balance charger to a power outlet. Plug the balance cable (white) and the charging cables (black and red) into the balance charger. Then connect the charging pad to the battery slot.
2. Turn on the power switch on the back of the charger.
3. Press ▶ to enter.
4. Press ▶ again to charge the battery.

To stop charging: Press ■ .

When charging is completed (battery voltage about 26.4V), the charger would beep and stop charging.Please unplug the battery as soon as possible.

Charging State

While charging, press ▶ to check cell voltage.

Charger would stop charging when the cell voltage reaches 4.4V (±0.02).

Copyright ©2026 SwellPro All Rights Reserved

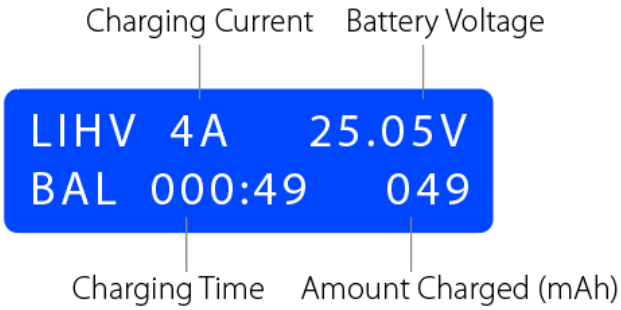

Charging State



Cell Voltage

Adjust Charging Current

Before entering charging, you can adjust the charging current by pressing [−] and [+]. The charging current can be set between 0.5A to 6A.



💡**Lower the charging current to extend battery health. Increase the charging current to increase the charging speed.**

Battery Check

Check the battery status by switching to the battery check function.

To check battery status:

1. Connect the charger and battery, then turn on the charger.
2. Press [■] to switch to the battery check function.
3. Press [▶] to perform battery check. Press [▶] to view cell voltage.

Exit: Press [■].

Copyright ©2026 SwellPro All Rights Reserved

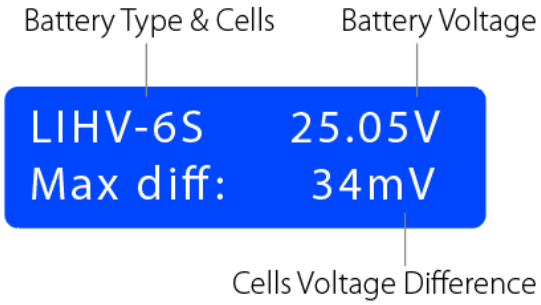

Battery Check



Cell Voltage

Battery Repair

Repair the battery if:

- The charger indicates the battery needs to be repaired.
- Battery voltage is lower than 19.2V.
- Cell voltage is lower than 3.2V.
- The cell voltage difference is higher than 60mV.

To repair the battery:

1. Connect the charger and battery, and turn on the charger.
2. Press ■ to switch to the repair function"LiHV Repair".
3. Press ▶ to enter battery repair function.
4. Press ▶ again to repair.

To stop repairing: Press ■ .

When completed, the charger would beep and stop. Please unplug the battery as soon as possible.



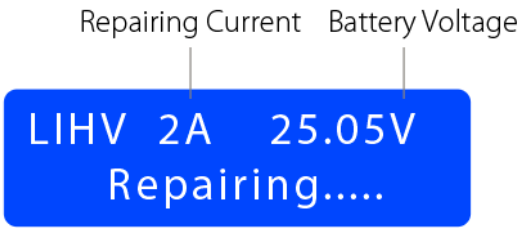

Copyright ©2026 SwellPro All Rights Reserved

Battery Storage

Before putting the battery in storage, you should always set the battery to the stored voltage. Stored voltage allows the battery to keep healthy while not used.

⚠ **If the flight battery is not being used for a long period of time, ensure to set the battery to store voltage (22.8V~23.2V) using the method described below. To prevent the battery from over-discharge, set the flight battery to store voltage every 3 months. For other battery maintenance guides, please check the Appendix Battery Care and Maintenance part.**

To set the battery to storage voltage:

1. Connect the charger and battery, and turn on the charger.
2. Press ■ to switch to the storage function ”LiHV Storage”.
3. Press ▶ to enter storage function.
4. Press ▶ again to start.

To stop: Press ■ .

When completed, the charger would beep and stop. Please unplug the battery as soon as possible.



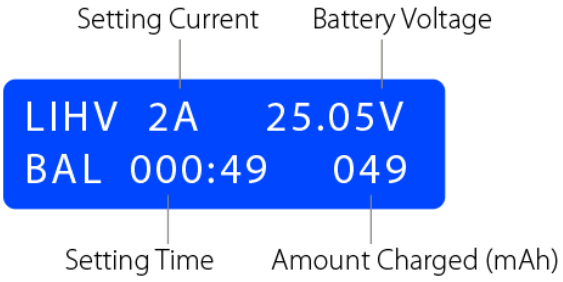

Barometric Membrane

The waterproof barometric membrane is SwellPro's featured technology. It allows air to pass through the internal chamber of the aircraft to ensure the barometer's proper functioning yet keeps the water from getting in to ensure the Fisherman FD3's all-waterproof design. The barometric membrane is delicate yet an extremely important part of proper flying and waterproofing. Therefore, you should pay special attention to the proper use of barometric membranes during your operation.

 Copyright ©2026 SwellPro All Rights Reserved

- **Always check the barometric membrane to ensure no damage is observed before flying.**
- **Rinse the barometric membrane thoroughly with fresh water every time after flying near the water environment.**
- **If you constantly fly your aircraft in a saltwater environment (sea), it is recommended to change the barometric membrane once every 3 months, since the salt particles can clog the tiny holes on the membrane.**
- **If the aircraft is not flying stably during hovering, or the aircraft is not flying normally during ascending or descending, the barometric membrane might be damaged. Please replace the barometric membrane.**
- **If the barometric membrane is damaged or shows signs of wear and tear, replacement of the waterproof barometric membrane is required.**

To replace the barometric membrane:

If the waterproof and breathable membrane is damaged or worn, it needs to be replaced with a new one. Replacement method:

1. Take out the top cover.

2.Remove the old waterproof and breathable membrane and clean all residues on the surface.

3. Paste the new breathable membrane.

Make sure there is a tight seal around the waterproof barometric membrane when applying.

4. Put the top cover back.

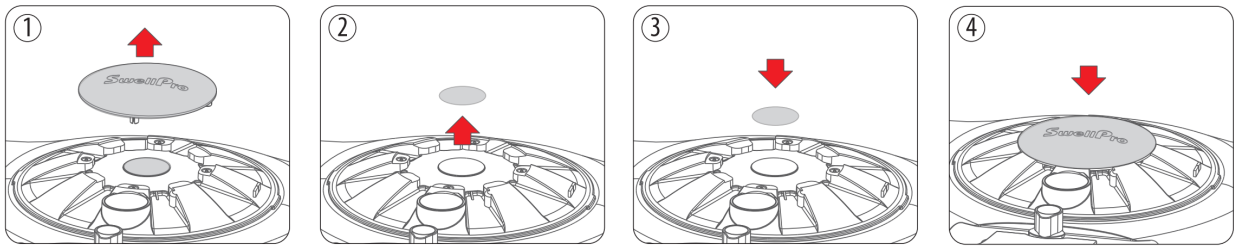

Copyright ©2026 SwellPro All Rights Reserved

Remote Controller

⚠ **The Fisherman FD3 remote controller is not fully waterproof. It is recommended to avoid exposing the controller to water during use, as this may result in device damage.**

Remote Controller Diagram

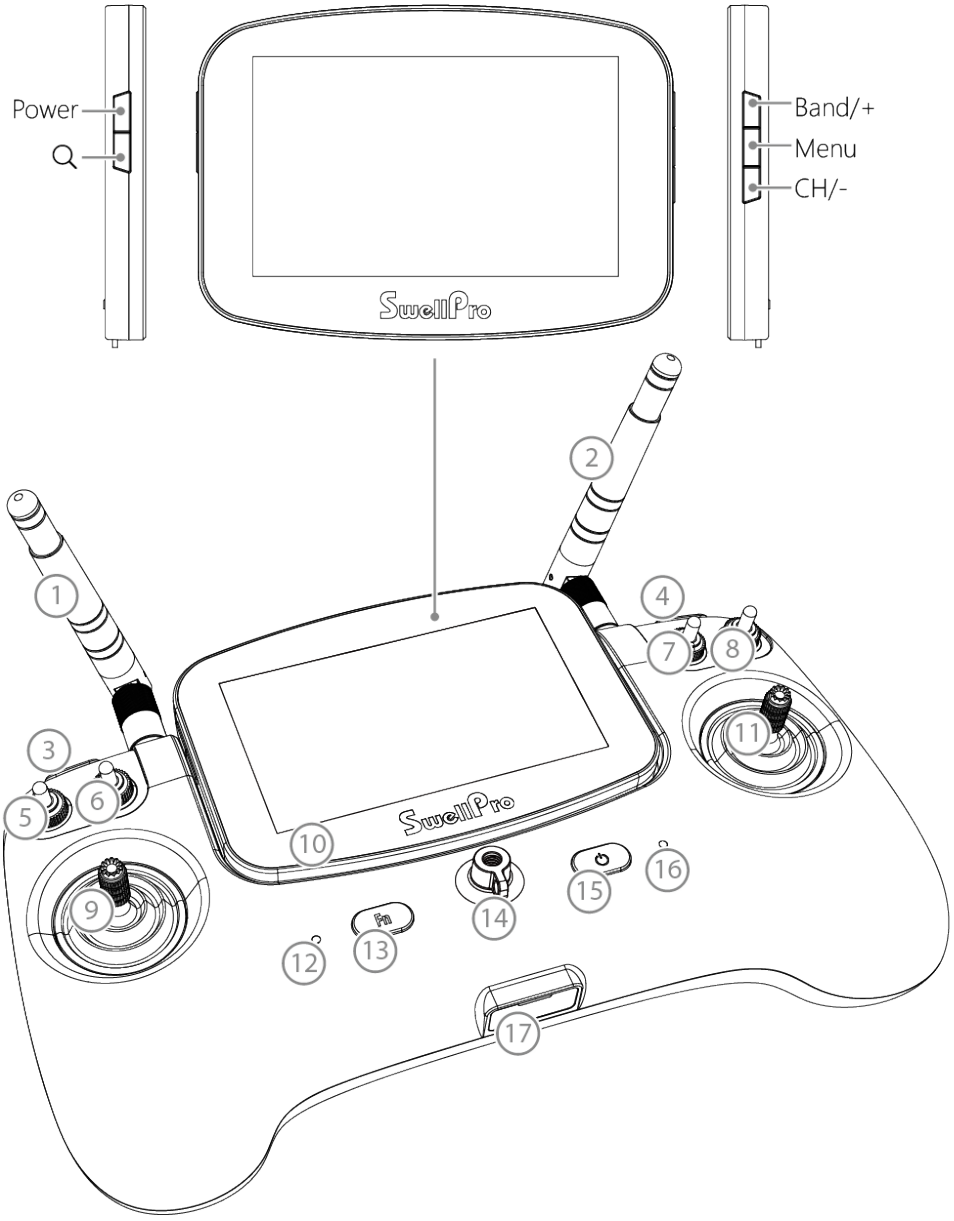

1. 2.4G Antenna
7. Return-to-Home Switch
13. Function Button

Copyright ©2026 SwellPro All Rights Reserved

2. 5.8G Antenna
3. Gimbal Up Button
4. Gimbal Down Button
5. Photo/Video
6. Payload Release Switch
8. Flight Mode Switch
9. Control Stick (Left)
10. Screen
11. Control Stick (Right)
12. Status Light (Left)
14. Phone Mount/ Attachment Ring
15. Power Button
16. Status Light (Right)
17. USB-C Port

Remote Controller Screen

💡 **If the outdoor environment is too bright to view the remote controller screen, you can also install a shading cover (sold separately) on the remote controller.**

The remote controller display screens of the advanced version and the basic version are different. Please refer to the details as follows:

Advanced Version

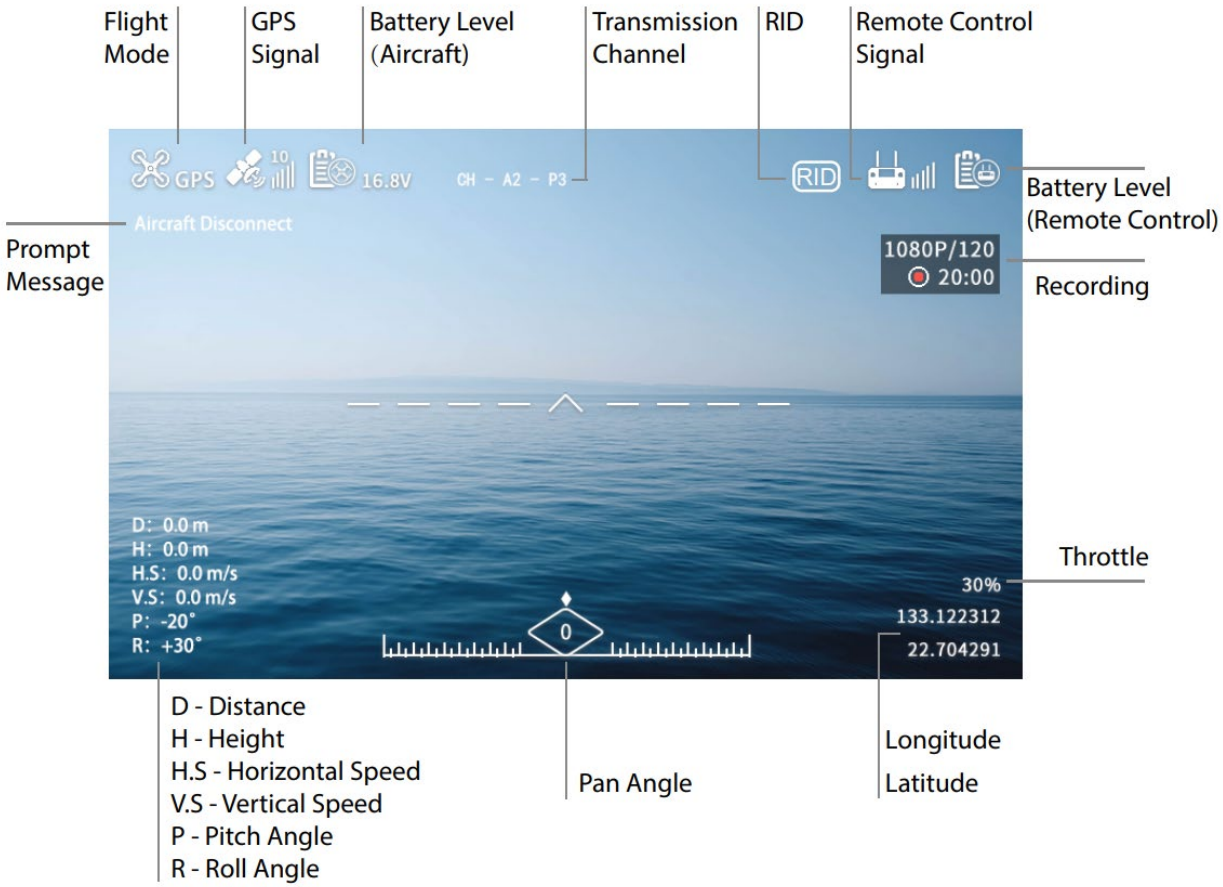

💡 **Flight Mode: G – GPS Mode; C – Cruise Mode; A – ATTI Mode**

Copyright ©2026 SwellPro All Rights Reserved

Basic Version

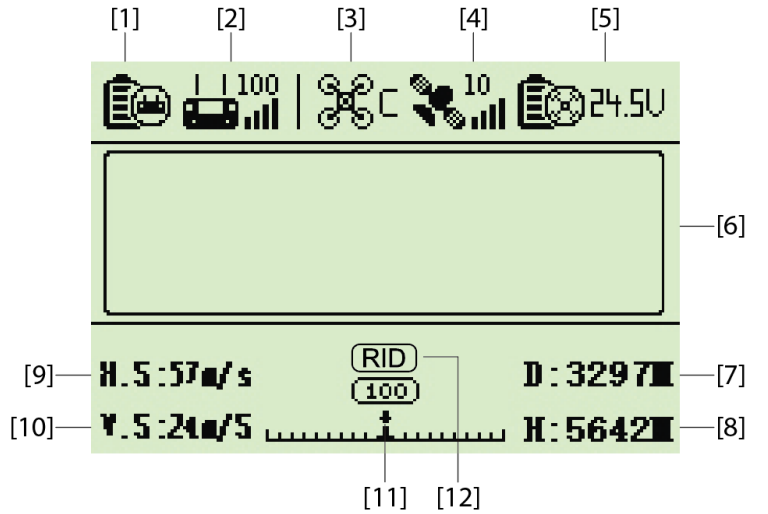

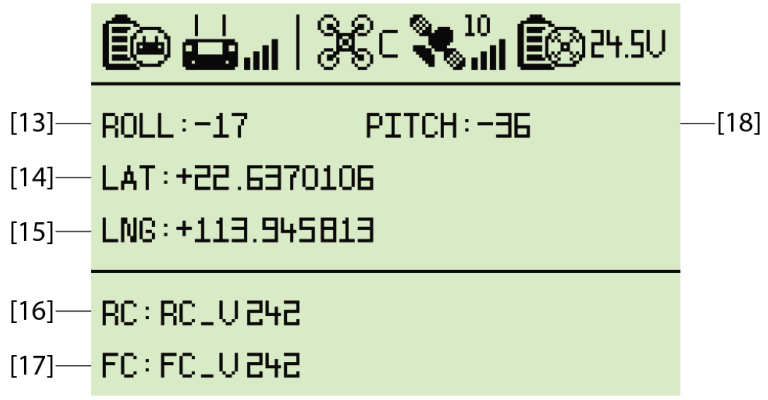

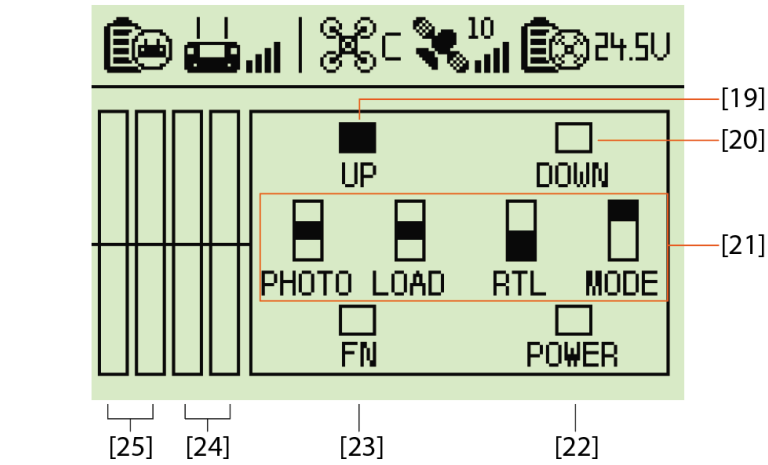

【1】 Battery Level (Remote controller)

【2】 Remote Control Signal Status

【3】 Flight Mode

【4】 GPS Signal Status

【5】 Aircraft Battery Voltage

【6】 Prompt Message Windows

【7】 Distance

【8】 Height

【9】 Horizontal Speed

【10】 Vertical Speed

【11】 Pan Angle

【12】 Beacon Status

【13】 Roll Angle

【14】 Latitude

【15】 Longitude

【16】 Remote Controller Firmware Version Number

【17】 Aircraft Firmware Version Number

【18】 Pitch Angle

【19】 Gimbal Up Status

【20】 Gimbal Down Status

【21】 Switch Status

【22】 Power Button Status

【23】 Function Button Status

【24】 Left Control Stick Status

【25】 Right Control Stick

Copyright ©2026 SwellPro All Rights Reserved

Status

💡 **[18] – [24] indicate the control status of the remote controller. Use it to check the status and functionality of all the switches. Use [23] and [24] to check if the control sticks are in the center position when rested in the middle, and check whether it needs to perform control stick calibration.**

💡 **Press the power button on the remote controller to switch the interface.**

💡 Press the function (Fn) button for 10 seconds to switch English and Chinese interface.

💡 **Flight Mode: G – GPS Mode; C – Cruise Mode; A – ATTI Mode**

RID Displays Information

The RID feature of the Fisherman Max meets the requirements for broadcast remote identification. Whether the remote controller is in GPS, cruise control or ATTI mode, the RID always broadcasts in-flight drone information: including the identity, location and altitude of the drone and its remote controller (operator). Remote identification refers to the ability of in-flight drones to provide identity and location information that can be received by other third-party devices.

The RID display information is available for both the Advanced and Basic version. (**RID**: Beacon normal**; ~~RID~~**: Beacon abnormal).

Before take-off

Items	**Remote control voice prompts**	**Remote control display**
Normal self-test	Beacon normal	Display **RID**
Abnormal self-test	Beacon error. Current mode cannot be unlocked.	Display **~~RID~~**

In-flight

Items	**Remote control voice prompts**	**Remote control display**
Normal	None	Display **RID**
Abnormal	Beacon error	Display **~~RID~~**

⚠ During the flight, if the remote controller prompts "Beacon error" and displays ~~RID~~, please return to home and land immediately to troubleshoot, and resolve the RID fault.

⚠ The remote control of the Fisherman Max has a built-in GNSS module, and the location information of the remote controller would be transmitted to the drone and then broadcast. If the remote controller is occluded near or above the source of interference, it may cause abnormal RID function.

Copyright ©2026 SwellPro All Rights Reserved

Remote Controller Status Lights

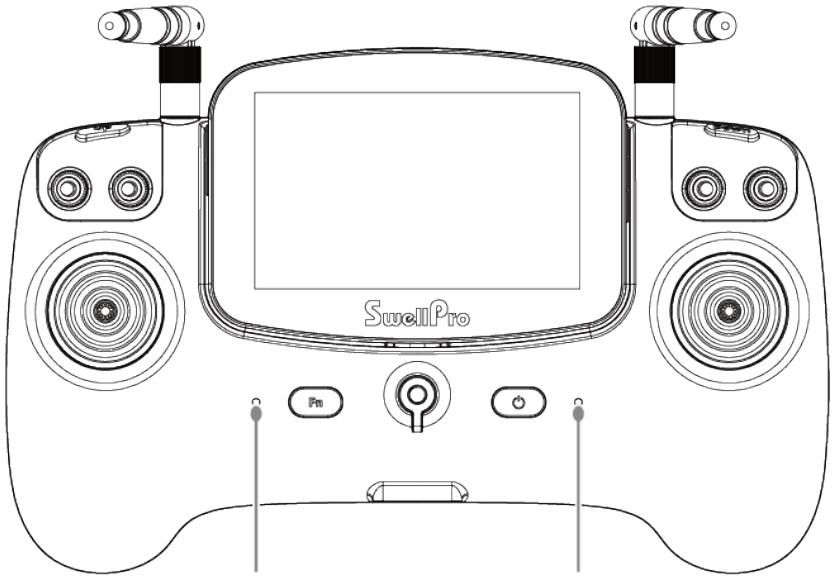

Left Status Light		
	Solid Green	Aircraft Connected
	Red/Green Flash Alternatively	Pairing / Reseting WiFi / Calibrating Control Sticks
	Solid Red	Aircraft Disconnected
Right Status Light		
	Solid Green	Battery Level Sufficient / Fully Charged
	Solid Red	RC Low Battery (Level 1) / Charging
	Flash Red	RC Low Battery (Level 2, power off automatically in 20 secs)

Display Settings

This section is only for the advanced version remote controller.

There are buttons on each side of the display to adjust the settings of the display.

Copyright ©2026 SwellPro All Rights Reserved

Turn ON/OFF

Press Power for 2 seconds to turn ON/OFF the display.

Adjust Settings Menu



Adjust the display **brightness**, **contrast**, **saturation**, **system language**, and **reset** by accessing the settings menu.

Menu	Enter settings menu / Switch setting
Band/+	Adjust setting to switch band(+)
CH/-	Adjust setting to switch channel (-)

⚠ You can adjust the frequency by using the Band/+ and CH/- buttons on the right side of the remote controller display. we recommend using frequencies **C8, E8, and C5**.

Copyright ©2026 SwellPro All Rights Reserved

Phone Mount(No need to install if you don't use the APP)

Install

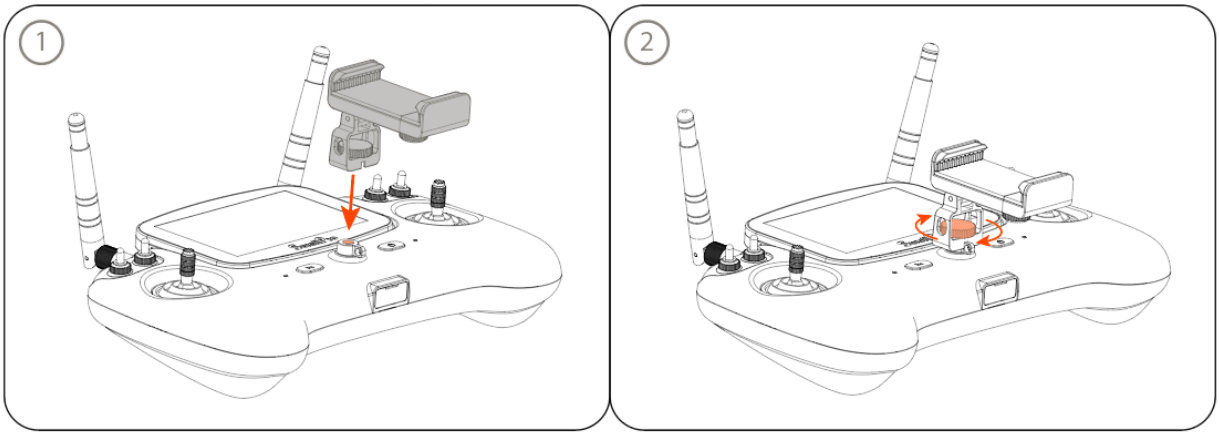

Please take out the phone mount from the package, align the fixing screw with the installation base of the remote control; rotate the fixing screw and lock it to complete the installation. (As above pictures)

Use

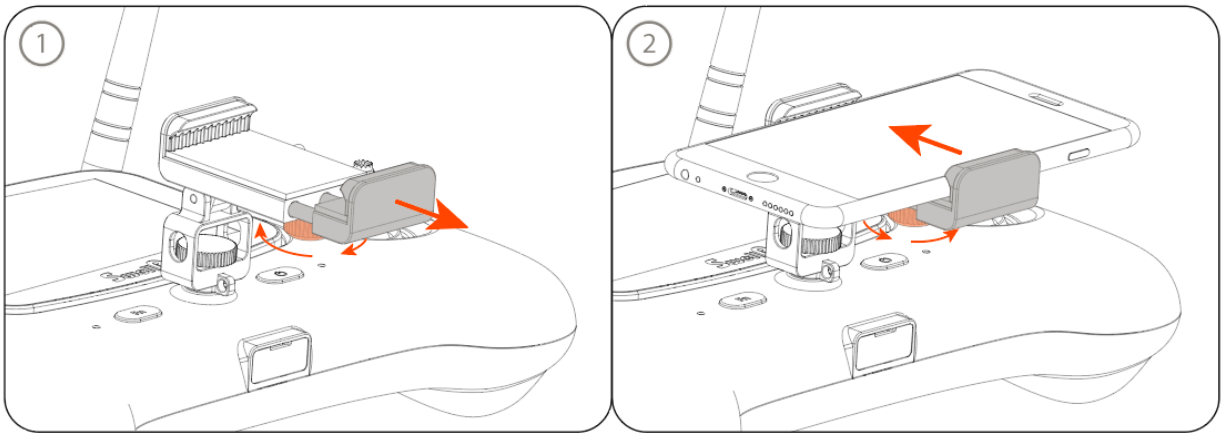

Please loosen the fixing knob on the back of the mobile phone bracket, slide the bracket to open, then clamp the mobile phone and tighten the knob to complete the mobile phone installation. (as shown in the picture above)

Image Transmission Settings

This section is only for the advanced version remote controller.

Copyright ©2026 SwellPro All Rights Reserved

If there is a specific channel you want your Fisherman FD3 rate on, or there is strong interference on the channel you are using, you can switch the communication channel. The communication channel shows on the top middle of the remote controller screen. (CH-**XX**-P3, **XX** is the current image transmission channel which you are using)

Press Band/+ to switch bands from A – E.

Press CH/- to switch channels from 1 – 8.

Power ON/OFF

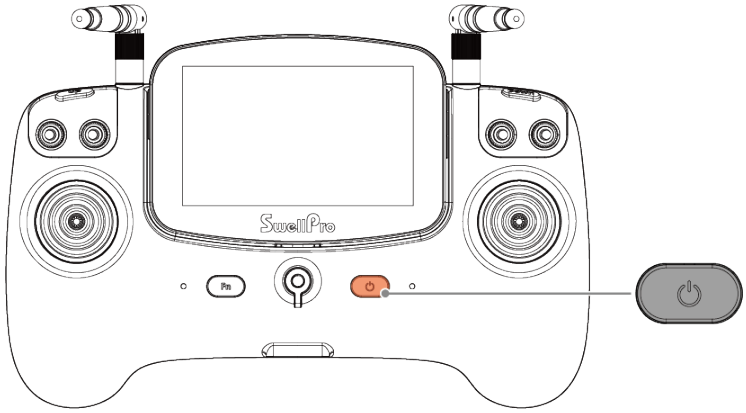

Short press the power button once, then long press for 2 seconds.

If the remote controller prompts "Control Stick Error", simply toggle up Payload Release, the RTH, and Flight Mode switches to dismiss the prompt. (Payload Release – OFF; RTH – Normal; Flight Mode – GPS)

Copyright ©2026 SwellPro All Rights Reserved

Charging

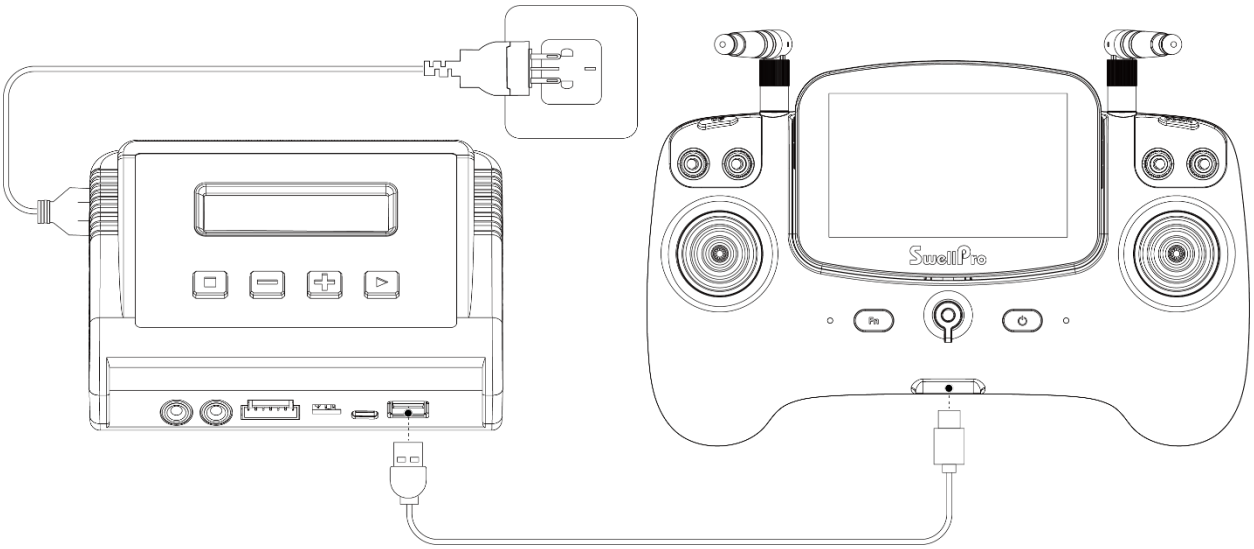

The remote controller can be charged from the in-the-box charger or a standard 5V USB-C adapter. Recommend using a **5V/2A** USB-C adapter.

The right LED light on the remote controller will turn **red** while charging. When the remote controller is fully charged, the LED light will turn **green**.

⚠ **If the remote controller is not being used for a long period of time, please charge the remote controller to 3 bars or above) for storage. To prevent the battery from over-discharge, re-charge the the remote controller to 3 bars every 3 months. For other battery maintenance guides, please check the Appendix Battery Care and Maintenance part.**

Pairing

The remote controller and the aircraft are paired at the factory before shipping. There is no need to pair them for your first use. If the aircraft and the remote controller are not able to connect, please try the following steps to pair the aircraft and the remote controller:

1. Power on the remote controller while keeping the aircraft off.
2. Press and hold the function button (Fn) and the power button for 3 seconds.

The red and green light on the left side of the remote controller flashes alternately, and a voice prompts enter pair process.

Copyright ©2026 SwellPro All Rights Reserved

3. Power on the aircraft.

Please turn on the aircraft wthin 10 seconds when the remote controller prompts enter pair process.

4. The remote controller and the aircraft would pair automatically,then you can hear the voice prompt of pair process is sucessful.

💡 **To exit the pairing mode, press the function button (Fn) button once.**

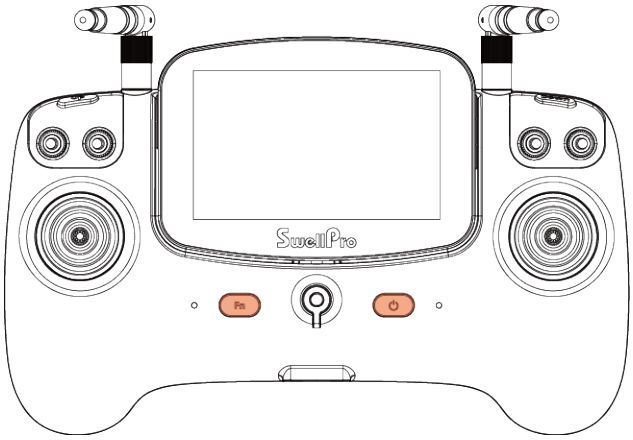

Control Sticks Calibration

Calibrate the control sticks if:

- The remote controller prompts "Control Stick Error".
- The aircraft is not able to fly straight.
- In GPS mode, the aircraft is moving in one direction or changing its orientation when there is no input from the remote controller.
- The aircraft is not flying in an intended direction when you are controlling the aircraft.

To calibrate control sticks:

1. Power off the aircraft.

2. Press and hold the function button and the gimbal down button for 3 seconds.

The remote controller would start to beep and prompt for “Joystick Calibration”

3. Push both sticks all the way up and rotate about 5 circles, then release both control sticks, the remote controller will beep and indicate the calibration is complete.

⚠️ **If the calibration is not successful, the remote controller will keep beeping. Please repeat step 3.**

⚠️ **While calibrating, move the control sticks gently. Avoid moving abruptly.**

Copyright ©2026 SwellPro All Rights Reserved

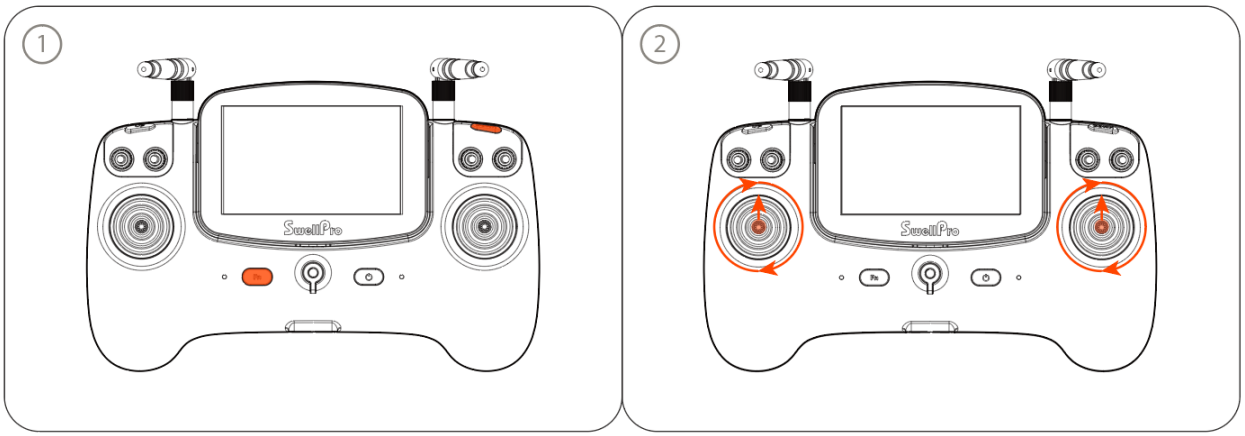

Optimal Signal Transmission

Remote Controller Antenna Orientation

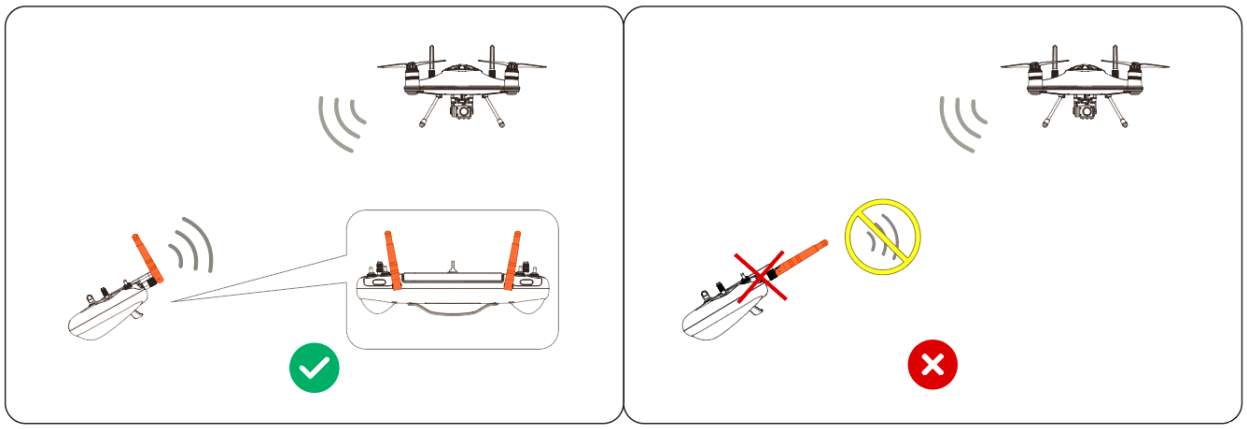

Position the antenna parallel to the aicraft for opitimal siganl transmission.

DO NOT point the tip of the antenna to the aircraft. Otherwise, it would result in signal lost.

Aircraft Antenna Blind Spot

Due to the nature of the antenna radiation pattern, there is a blind spot about **40°** under the aircraft. When positioned under the blind spot area, the remote controller will experience **signal loss**. If you encounter a signal loss issue when you are near the aircraft, you might be in the blind spot area.

Copyright ©2026 SwellPro All Rights Reserved

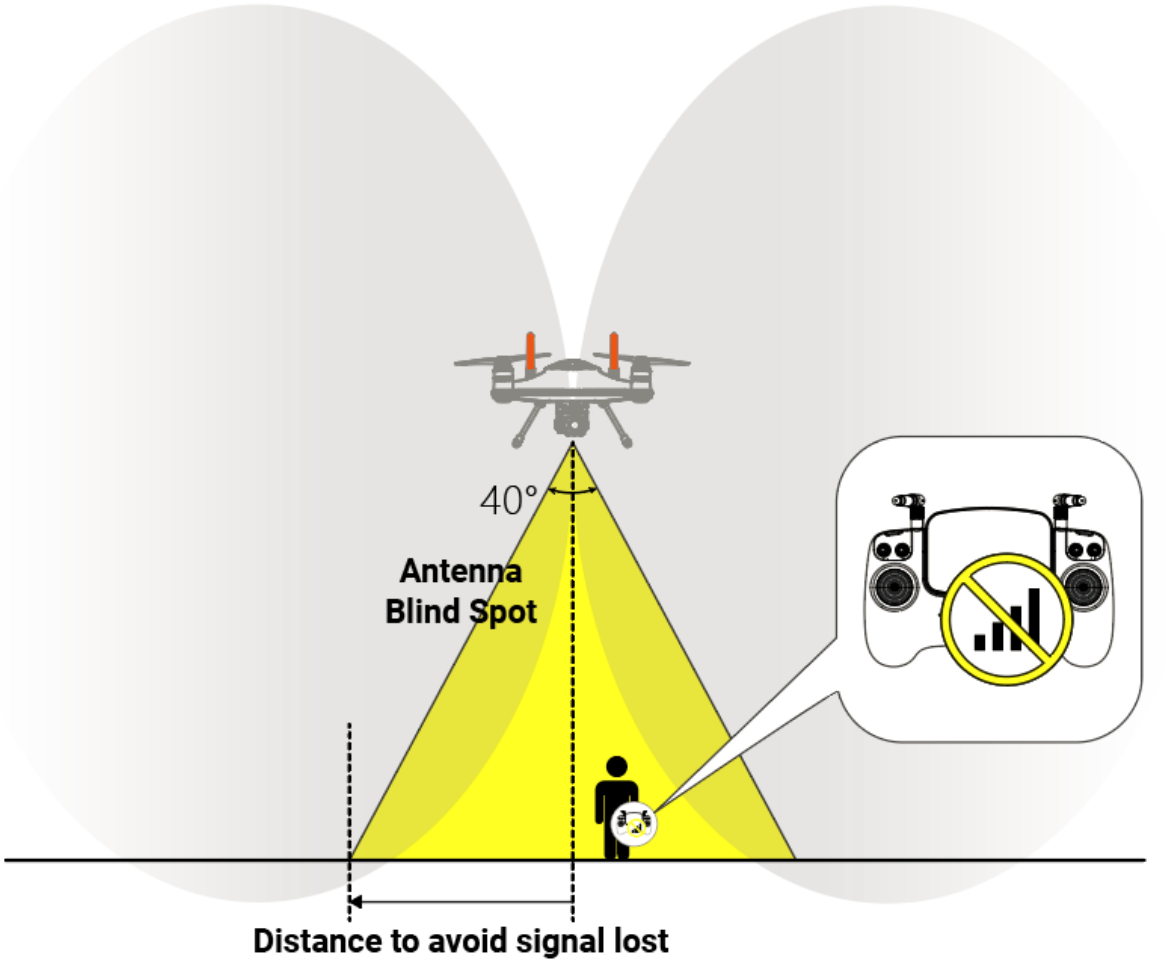

Please avoid being in the blind spot zone to prevent the signal loss issue.

- **During take-off, try to fly the aircraft away from you instead of quickly ascending the aircraft into the overhead area near you.**
- **Same for Return-to-Home/Landing, land the aircraft at a safe distance before you to avoid being in the blind spot area.**

Here is the estimated safe distance from the aircraft to prevent signal loss due to being in the blind spot area.

Aircraft Heigh	Safe Distance
10 m	4 m
30 m	11 m
50 m	18 m
80 m	30 m
100 m	37 m
120 m	44 m

Copyright ©2026 SwellPro All Rights Reserved

💡 If you want to estimate the safe distance, use this equation $\boldsymbol{tan}(\mathbf{20}°) \times \boldsymbol{Height}$ to calculate. (Height is the height of the aircraft, which can be obtained from the remote controller or the App)

Reset Wi-Fi Password

If you forget the Wi-Fi password of your remote controller, you can reset the Wi-Fi password back to the default password **"12345678"**.

Reset Wi-Fi Password:

Press and hold the power button and the gimbal up button for 5 seconds. Release to complete reset

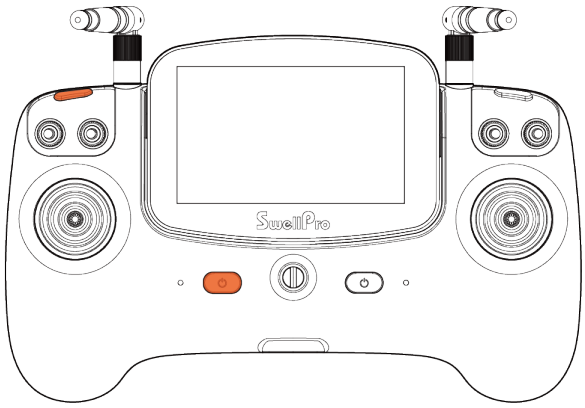

 Copyright ©2026 SwellPro All Rights Reserved

Flight

Flight Safety and Environment

- Please make sure you have a comprehensive understanding of the Fisherman FD3, and all the necessary measures required to implement a successful return home function in the event of an emergency.
- If this is your first time flying an aircraft, please read this manual thoroughly and watch the tutorial videos on our website https://www.swellpro.com/pages/support-center, or our YouTube channels.
- We recommend taking professional training and guidance. When flying, choose an Appropriate environment according to your skills. Check all calibrations and choose a large open area to practice.
- It is **strongly** recommended that all aircraft pilots become familiar with flying in ATTI mode in case of GPS or magnetic interference, which may result in malfunction when flying in GPS mode.
- When experiencing GPS and magnetic interference during the flight, switch to ATTI mode to gain full control and safely return the aircraft manually. Failure to do so and result in the aircraft crashing, and the pilot takes full responsibility.
- Please be well prepared before each flight, and avoid any violent or excessive operations.
- Please maintain strict compliance with the local laws, any flying in NO-FLY ZONES is prohibited.
- Any illegal & improper use or operation of this product is prohibited.
- Any invasion & violation of another person's right to privacy is not allowed. Before using this product, it remains the duty of the aircraft pilot to comply with the local laws regarding privacy protection.
- Any invasion or flying over another person/s property is not allowed, please agree with any persons regarding any potential breach of privacy before the proposed flight.
- DO NOT fly the aircraft under the influence of alcohol, drugs, or any other physical or mental impediment.
- Do not fly the aircraft with a malfunctioning remote controller.
- Please fly the aircraft away from crowds.

Flight environment requirement

- Always choose the open space as an ideal flying environment.
- Flying between or near tall buildings could adversely affect the functioning of the compass and adversely affect or block GPS and transmission signals.

Copyright ©2026 SwellPro All Rights Reserved

- During the flight, try to maintain a line of sight with the aircraft, and keep away from obstacles and people.
- Avoid flying near areas with high electromagnetic interference such as power lines or signal towers to minimize the risk of interfering with the remote controller of the aircraft.
- Fly 4000 meters above sea level as environmental factors including air density and wind shear reduce the performance of the aircraft and battery.
- Before flying in low temperatures, warm the battery to 25℃ to maximize flight time.
- Although the Fisherman FD3 is waterproof, do not fly in fog or strong wind conditions. (For wind speed exceeding 14 m/s)

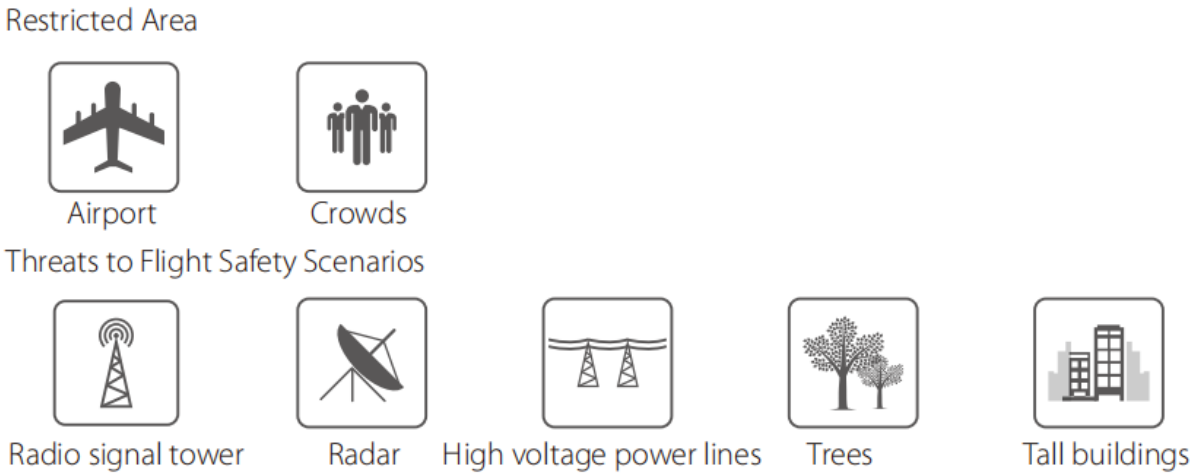

Flight Restrictions

According to provisions of the International Civil Aviation Organization and many national air traffic regulations, aircraft must be operated in specified airspaces. By default, the Fisherman FD3 is configured to not exceed an altitude of 120m from the Home Point altitude.

Pre-Flight Checklist

- Flight batteries, the remote controller, and your mobile devices are fully charged.
- Check all propellers are in good condition and correctly installed.
  Ensure there is no wobble on the propeller after you install it. If you correctly install the propeller, the propeller still wabbles, you might need to tighten the screws on the propeller base.
- Manually rotate the 4 motors to ensure they can spin smoothly.

Copyright ©2026 SwellPro All Rights Reserved

- Ensure all the connector sealings are tightly sealed with the rubber rings attached, including the battery sealing, and all the base connector ports. Ensure the sealings are free of dirt, sand, and other debris.
- Ensure the waterproof barometric membrane is not damaged.
- Ensure the gimbal camera and payload release modules are tightly mounted to the aircraft.
- Ensure the silicone plug on the bottom of the remote controller is tightly sealed.
- MicroSD card has been inserted and tightly sealed.
- Check the following flight data: flight battery level > 24.0V; remote controller battery level > 1 bar; GPS signal > 5.

Basic Flight Steps

1. Check the pre-flight checklist.
2. Install the propellers.
3. Install the flight battery.
4. Place the aircraft on a flat, open, and obstructive surface.
5. Power on the remote controller, followed by the aircraft.
6. Connect the phone to the remote controller's Wi-Fi.
7. For your safety, stand upwind and at least 3 meters away from the aircraft.
8. Novice pilots should always take off in GPS mode.
9. Start motors.
10. Push the left (throttle) control stick up slowly, allowing the aircraft to take off smoothly. Release the throttle when the aircraft is approximately 1.5 m high. Allow the aircraft to hover for a moment to ensure flight stability.
11. When you need to descend, gently pull down the left (throttle) control stick, allowing the aircraft to descend and land on a flat surface.
12. After landing, keep the left (throttle) control stick down for 3 seconds until the motors stop, or you can also pull both control sticks downward and outward to stop the motors.
13. Stop video recording before shutting down the aircraft, otherwise, the video file may be damaged.

Control the Aircraft

The left control stick controls Throttle & Yaw; the right control stick controls Pitch & Roll.

- Throttle controls the ascend or descend of the aircraft;
- Pitch controls the aircraft to fly forward or backward;
- Yaw controls the direction;
- Roll controls the aircraft to fly left or right.

Copyright ©2026 SwellPro All Rights Reserved

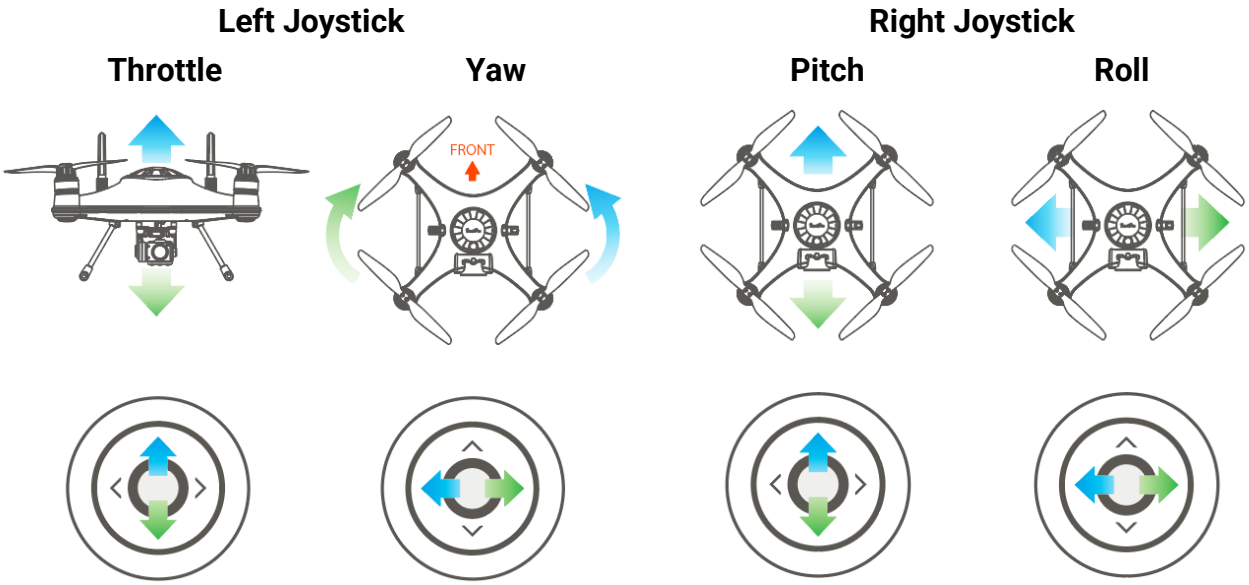

Starting and Stopping the Motors (Arming)

Starting (Arming) Motors

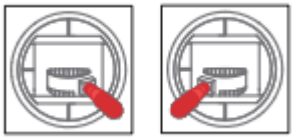

Pull both the left and right control sticks simultaneously down and inwards and maintain this position for 3 seconds. The motors will be unlocked and start rotating.

💡 The motor can be unlocked and started only after the drone has completed GPS star search and positioning successfully.

Copyright ©2026 SwellPro All Rights Reserved

Stopping Motors

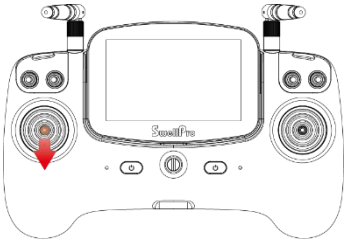

Method 1: After the aircraft has landed, pull the left stick all the way down and hold for 3 seconds. The motor would stop rotating and lock.

💡 This method is recommended.



Method 2: After the aircraft has landed, pull both the left and the right control sticks down and outward.

Stopping Motors Mid-flight

Stopping motors mid-flight will cause the aircraft to crash. Stopping aircraft motors while flying should only be carried out in an emergency when stopping the motors will minimize potential damage. For example, when the aircraft is out of control, there is a risk that the aircraft may hit the surrounding people. To stop motors mid-flight, pull both the left and the right control sticks down and outward (Stopping Motors - Method 2).

Takeoff and Landing

Takeoff

1. Place the aircraft on flat, open, and unobstructed surface.
2. Complete all the pre-flight checklist items.
2. Power on the remote controller, followed by the aircraft.
3. Connect the phone to the remote controller's Wi-Fi.
4. Start motors.
5. Gently push the left (throttle) control stick up slowly, allowing the aircraft to take off smoothly. Release the throttle when the aircraft is approximately 1.5 m high. Allow the aircraft to hover for a moment to ensure flight stability. Or use the auto takeoff function on the App.

Copyright ©2026 SwellPro All Rights Reserved

Landing

1. Check the condition for a safe landing.

2. Gently pull the left (throttle) control stick down, allowing the aircraft to descend and land on a flat surface.

3. After landing, keep the left (throttle) control stick down for 3 seconds until the motors stop.

Flight Modes

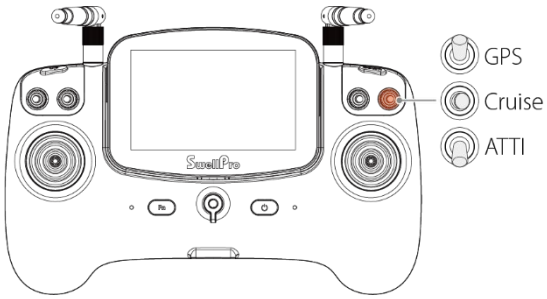

Switch the flight mode toggle to switch the flight mode of the aircraft.

Flight Modes	Description
GPS	In GPS mode, the aircraft maintains a fixed position and height while hovering.
ATTI	In ATTI mode, the aircraft maintains a fixed height but not a fixed position. Therefore, when there is no input to the remote controller, the aircraft is going to drift with the wind while maintaining its height.
Cruise	In Cruise mode, the aircraft is going to maintain the direction and speed of your input after you release the remote controller.

⚠ When flying the aircraft in ATTI mode with payload attached, avoid controlling or braking the aircraft abruptly. Failure to do so may result in the excess movement of the payload and the attachment wire causing the aircraft to crash. SwellPro is not responsible for the incident if users not following the proper instructions.

Copyright ©2026 SwellPro All Rights Reserved

⚠ **Please be aware of that the aircraft can be flight pass the distance limit in ATTI mode. Remote Controller will prompt “Max Distance Reached”.**

Low Battery Warnings

Fisherman FD3 has **two** low battery warnings to inform aircraft of low battery levels. When the low battery level is reached, the remote controller would vibrate, beeps, and prompts voice messages to inform the low battery status.

Level 1 Low Battery Warning

The aircraft battery level has reached **22.2 V**. The remote controller would vibrate, beep, and prompt "**Aircraft Low Battery - Please return to home**". The red light on the aircraft's front arm began to flash slowly. The aircraft would initiate Low Battery Return to Home.

Level 2 Low Battery Warnings

The aircraft battery level has reached **21.6 V**. The remote controller would vibrate, beep, and prompt "**Aircraft Battery Level Critical - Land in 10 seconds**". The red light on the aircraft's front arm began to flash quickly.. After 10 seconds, the aircraft would start landing to protect the aircraft and battery.

⚠ **During RTH, you can regain control of the aircraft by controlling the control sticks to avoid the obstacle while return to home.**

⚠ **During the flight, it is important to constantly check the battery voltage, as flying in the conditions like strong wind, rapid movements, and heavy load can deplete the battery more rapidly.**

⚠ **DO NOT continue to fly the aircraft after reaching Level 2 Low Battery Warnings. This would cause damage to the battery and the aircraft to crash.**

Return to Home

Copyright ©2026 SwellPro All Rights Reserved

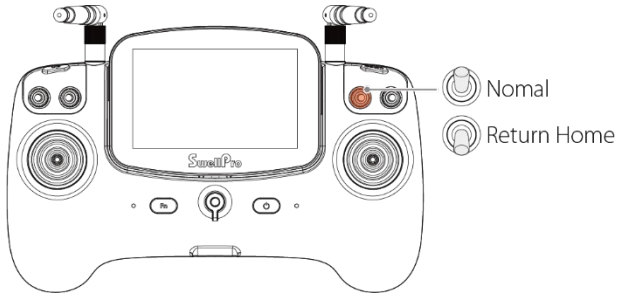

Switch the Return to Home toggle down to “Return Home”. The remote controller would prompt “Return to Home”. The aircraft would start to return to the take-off location.

Switch the Return to Home toggle up to “Normal” to exit Return to Home.

Return Home Process

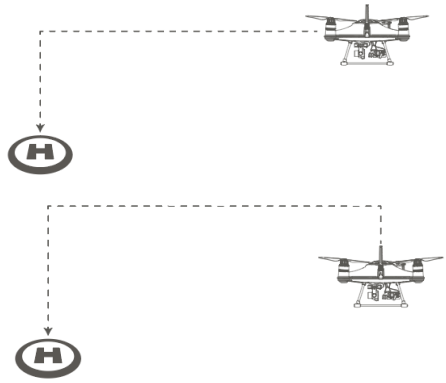

If the aircraft's height is higher than RTH Height (default 20 m), the aircraft will maintain its height and return to the home point.

If the aircraft's height is lower than RTH Height (default 20 m), the aircraft will ascend to RTH Height and then return to the home point.

💡 ⚠ **The aircraft may not be able to return to home if the aircraft's GPS signal is too weak (GPS signal shows 0).**

⚠ **Always keep eye on the aircraft during the RTH process, and watch out for any obstacles on the flight path**.

⚠ **During the return to home process, you can regain control of the aircraft by controlling the control sticks to avoid the obstacle while landing. However, flying the aircraft below 21.6 V is highly dangerous since the battery will not be able to maintain the flight and would cause damage to the battery and the aircraft to crash.**

⚠ **During Low Battery RTH, controlling the control stick will stop the aircraft return-to-home process. The remote controller will prompt “Aircraft Low Battery - Please return-to-home” if it happens. Please switch the RTH toggle to “Return Home” to return the aircraft.**

RTH Height

Setting RTH height based on the requirement of the flight environment is important for keeping the safety of the aircraft and surroundings. The default RTH height is 20 m.

Copyright ©2026 SwellPro All Rights Reserved

Failsafe RTH

Failsafe RTH automatically activates when there is a **signal loss** between the remote controller and the aircraft. The aircraft would initiate RTH when activates. During the Failsafe RTH process, if the remote controller reconnects to the aircraft, the aircraft will still return to home. If you want to stop the RTH process, switch the Return to Home toggle down and up again to exit RTH.

Low Battery RTH

Low Battery RTH activates when the flight battery voltage reaches **Level 1 Low Battery Voltage (22.2 V)**. The remote controller would vibrate, beep, and prompt "**Aircraft Low Battery - Please return to home**". The aircraft would initiate Low Battery Return to Home. It's ON by default.

Low Battery Payload Release

Low Battery Payload Release activates after the flight battery voltage reaches **Level 1 Low Battery Voltage (22.2 V)** for 5 seconds(The voltage more than Level 2 Low Battery Voltage **21.6V**) to enhance safe RTH when the aircraft is attached to a heavy load. Remote controller will beep 8 times. 10 seconds later, payload A and B will be released. During the 10 seconds, you can press the function button to deactivate low battery payload release. It's OFF by default.

⚠IF THE "LOW-POWER RETURN" OR "RETURN AFTER RELEASE" OR "LOW-POWER RELEASE" FUNCTION SET THROUGH THE APP IS TRIGGERED DURING FLIGHT, YOU NEED TO TURN OFF THE POWER OF THE AIRCRAFT AFTER RETURNING AND THEN RESTART IT TO UNLOCK AND USE IT TO ENSURE SAFETY.

⚠ THIS FEATURE HAS SAFETY RISKS. PLEASE USE IT WITH CAUTION. ONLY USE THIS FEATURE IN AN OPEN, CLEAR AREA WITH NO PEOPLE AROUND.

⚠ ENSURE THE SAFETY OF THE AIRCRAFT LOCATION TO PREVENT ANY DAMAGE TO PEOPLE AND THE SURROUNDING.

Low Battery Landing

Low Battery Landing automatically activates when the flight battery voltage reaches **Level 2 Low Battery Voltage (21.6 V)**. The remote controller would vibrate, beep, and prompt "**Aircraft Battery Level Critical - Land in 10 seconds**". After 10 seconds, the aircraft would start landing to protect the aircraft and battery.

⚠ During auto landing, you can regain control of the aircraft by controlling the control sticks to avoid obstacle while landing. However, flying the aircraft below 21.6 V is highly dangerous since the battery will not be able to maintain the flight and would cause damage to the battery and the aircraft to crash.

Copyright ©2026 SwellPro All Rights Reserved

Water Takeoff and Landing

⚠ Before landing on the water, watch out the water area for weeds or other debris to prevent the landing gear, attached accessories, and payload from getting tangled by them, which can cause the aircraft not able to take off.

Water Takeoff: Ascend quickly from the surface to prevent the aircraft from being affected by a passing wave.

Water Landing: Descend vertically to the surface, otherwise, it may flip and turn over. The flight controller will shut down the motors if the aircraft becomes inverted on the water.

Boat Takeoff and Landing

When takeoff or landing on the boat/kayak, **PAY EXTRA ATTENTION** to the operation, as it can be very difficult and dangerous to operate the aircraft in this environment.

- There should be enough space for the aircraft to take off or land on the boat.
- If there is not enough space on the boat, taking off and landing on the water can otherwise be a safer, alternative option, as there is sufficient space for the aircraft to operate.
- Always be aware of the direction of the wind relative to the boat for take-off and landing. Stand in the upwind position relative to the aircraft to prevent the aircraft from drifting toward you when take-off or landing in windy conditions.
- For your safety, it is not recommended to launch or land the Fisherman FD3 on your hands.
- After initiating return-to-home on the boat, always regain control and land manually when the aircraft is approaching the boat.

PowerFlip

⚠ **If the aircraft turn over the water, ensure to use PowerFlip to turn the aircraft to the upright position as soon as possible to prevent the risk of the barometric membrane getting damaged.**

If the aircraft turn over on the water, the PowerFlip feature enables the aircraft to flip back to its upright position.

Copyright ©2026 SwellPro All Rights Reserved

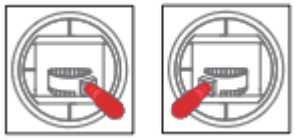

When the aircraft floats upside-down on the water, pull both the left and right joysticks simultaneously down and inwards and maintain the control until the aircraft flips over to its upright position.

💡 When operating the PowerFlip, the remote controller will prompt "Start Flip". When the aircraft flips, the remote controller will prompt "Flip Successful". At this time, unlock the motor again and you can control the aircraft to take off from the water.

Copyright ©2026 SwellPro All Rights Reserved

Gimbal Camera

This section is only for FD3 advanced version.

⚠ After using in seawater, soak and rinse thoroughly with clean fresh water before the seawater dries out.

⚠ If seawater or other sediments form on the gimbal camera, soak thoroughly with fresh water and clean all sediments on the camera and motor before use. For more information, check the aircraft's "Maintenance manual".

Control

Camera Control



Photo : toggle up to take a photo.

Preview: screen preview status

Video : toggle down to start recording, toggle down again to stop recording and save the file.

Gimbal Control

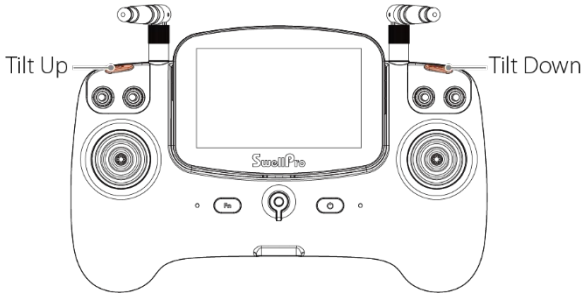

Tilt Up ①: Press and hold the gimbal up button to turn the camera up.

Tilt Down ②: Press and hold the gimbal down button to turn the camera down.

Copyright ©2026 SwellPro All Rights Reserved

Camera Settings

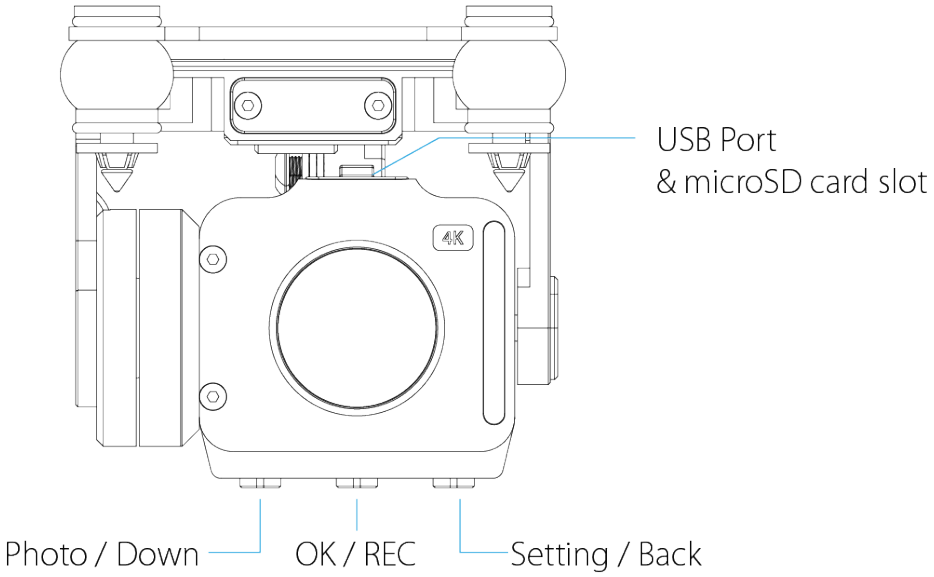

Photo / Down	**Take photo / Go down:** In preview mode, press once to take a photo; In settings mode, press once to go down.
OK / REC	**Record / Select:** In preview mode, press once to start recording, and press again to stop recording; In settings mode, press once to select.
Setting / Back	**Enter settings menu / Go back / Restart:** In preview mode, press once to enter the settings menu; In settings mode, press once to go back; Press for 2 secs to restart.

Press Setting / Back to enter the settings menu.

Copyright ©2026 SwellPro All Rights Reserved

Photos Setting

Set the photo size, format, burst, and time-lapse here.

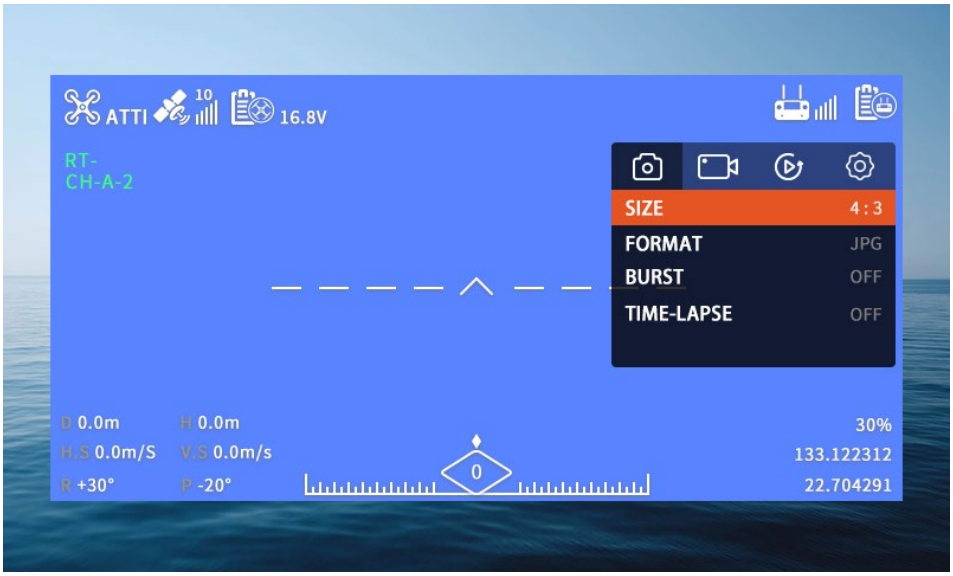

Videos Setting

Set the video resolution, EIS, format standard, and format here.

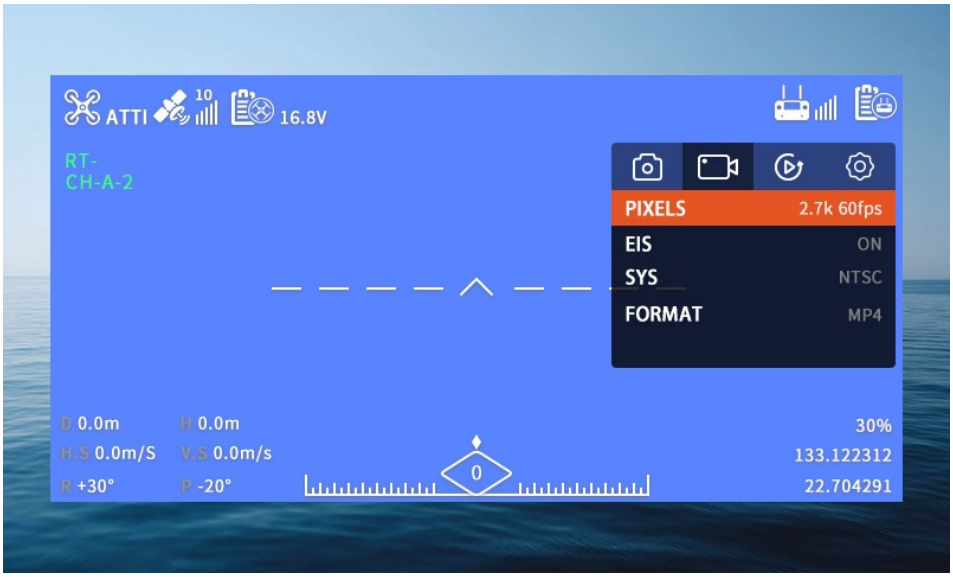

Gallery

Select “PHOTOS” to view the photo gallery. Select “VIDEOS” to view the video gallery.

Copyright ©2026 SwellPro All Rights Reserved

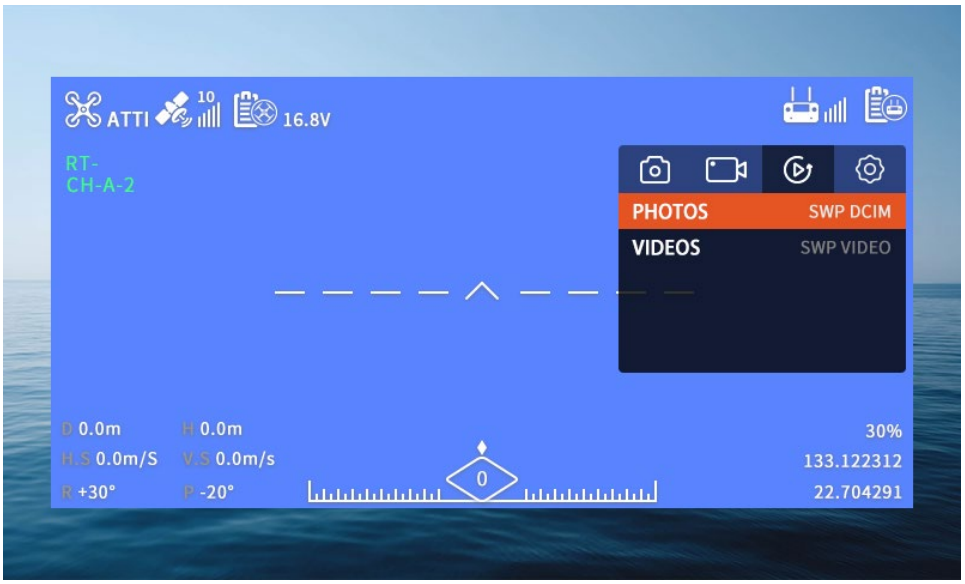

Camera Setting

Set camera white balance, EV, metering, ISO, anti-flicker, and language; check the camera firmware version number; format or factory reset here.

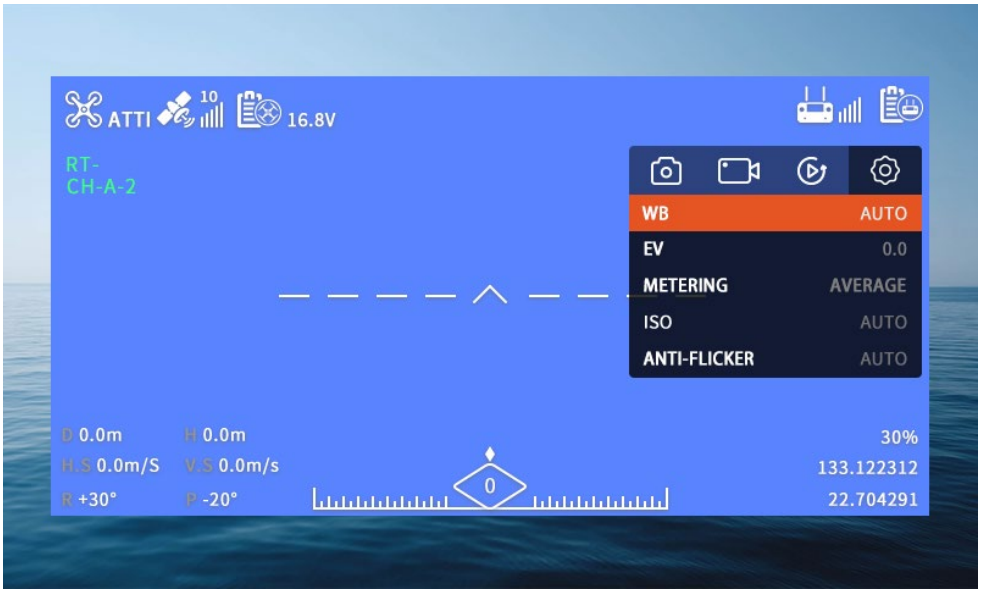

Copyright ©2026 SwellPro All Rights Reserved

Camera Status Lights

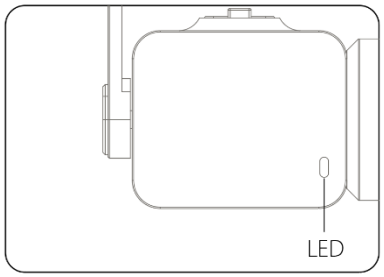

LED		
	Solid Green	Ready to shoot
...	Flashing Green	No SD card
	Flashing Red Once	Taking photo
...	Flashing Red	Video recording

Solid Flashing

microSD Card

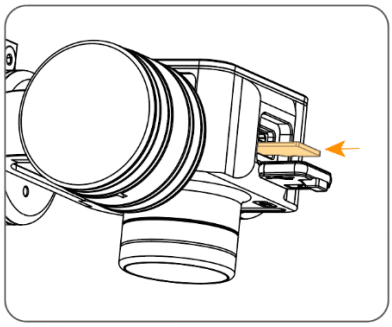

1. Open the rubber sealing on the top of the camera, insert the microSD card in the correct direction, and press the Micro SD card, the "click" sound indicates that the installation is in place.
2. After installing the microSD card, plug the rubber seal back.

⚠ **Make sure the rubber seal is tightly plugged in to ensure waterproofing.**

- **The camera supports microSD cards with a maximum capacity of 128GB. Since the camera requires fast reading and writing of high-stream video data, please use microSD cards with Class 10 or UHS-1 or above to ensure proper functioning.**
- **Do not insert or unplug the microSD card during aircraft shooting, as data files may be damaged or lost.**

Copyright ©2026 SwellPro All Rights Reserved

- **Once you are done recording, stop recording and save the file. If you turn off the power directly before saving the files, the recording file might be damaged.**

Copyright ©2026 SwellPro All Rights Reserved

Payload Release

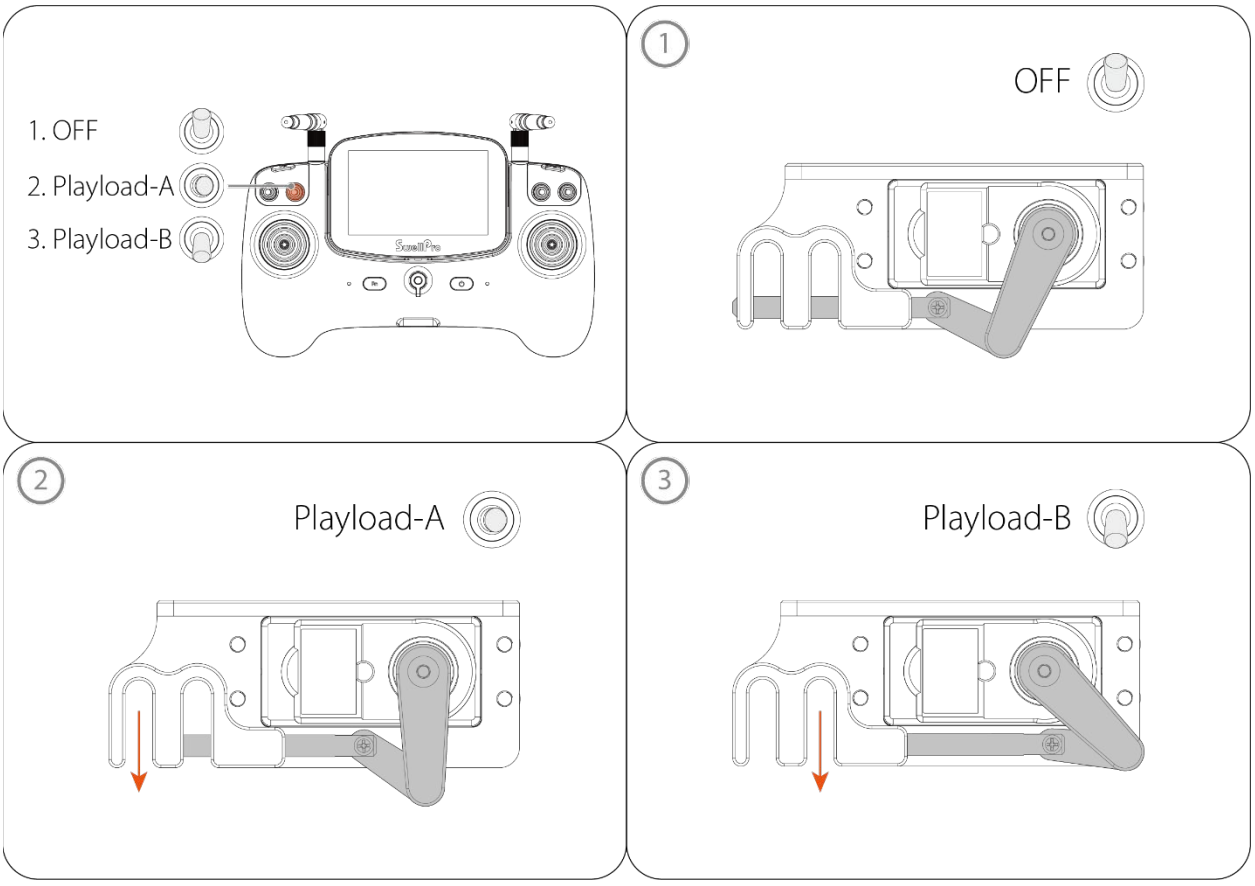

Copyright ©2026 SwellPro All Rights Reserved

Appendix

Specification

Aircraft	
Waterproof Rating:	IP67
Weight (include battery, propellers, gimbal camera, and payload release module):	2540g
Size (w/o propeller):	628*628*218mm(With propellers) 372*372*202mm(Without propellers)
Max Ascent Speed:	3m/s
Max Descent Speed:	2m/s
Max Flight Speed:	18m/s（Without payload） 14m/s（With max payload）
Max Tilt Angle:	30°
Max Altitude from Takeoff Point:	120m default
Max Flight Distance:	1200m[1]
Max Image Transmission Distance:	1200m[2]
Max Payload Capacity:	2000g
Max Wind Speed Resistance:	18m/s
Max Flight Time(hovering):	25 mins (no wind & no load)
Hovering Precision:	±0.5m
Transmitter Power (EIRP)：	**2.402-2.478GHz (Advanced and Basic Version)** <33 dBm（FCC）， <20 dBm（CE） **5.745-5.825GHz(Advanced Version)** <33 dBm（FCC），<14 dBm（CE）
Working Temperature：	-10°C~40°C
Satellite Positioning Systems：	GPS + Galileo + BeiDou

Remote Controller（Advanced Version）	
Waterproof Rating:	Non-waterproof
Size:	276*190*74mm

[1] [2] **Measured in an open environment, without interference. It does not reflect the actual distance. Use as reference during the flight.**

Copyright ©2026 SwellPro All Rights Reserved

Weight:	709.5 g
Screen Size:	5 inch
Resolution:	800*480
Aspect Ratio:	16：9
Brightness:	500cb/m
Operating Frequency:	2.402-2.478GHz，5.745-5.825GHz
Transmitter Power (EIRP)	2.402-2.478GHz;<26 dBm （FCC）， <20 dBm（CE）
Sensitivity:	-92dB
Battery:	2S 3000mAh
Working Time:	5 hours
Charging Time:	3 hours
Power Input:	USB TYPE-C
Working Temperature：	-10° C - 40° C
System Language:	English, Chinese

Remote Controller（Basic Version)	
Waterproof Rating:	Non-waterproofs
Size:	276*190*74mm
Weight:	709.5 g
Screen Size:	3.6 inch
Operating Frequency:	2.402-2.478GHz
Transmitter Power (EIRP)	2.402-2.478GHz <26 dBm（FCC）， <20 dBm（CE）
Latency：	-92dB
Battery:	2S 3000mAh
Working Time:	9 hours
Charging Time:	3 hours
Power Input:	USB TYPE-C
Working Temperature：	-10° C - 40° C
System Language:	English, Chinese

Flight Battery	
Nominal Capacity：	4200mAh
Nominal Voltage：	23.1V
Type：	6S LIHV
Size：	153.6*82.4*48.3mm
Weight：	716g
Working Temperature：	0° C - 40° C
Charging Time:	120 mins
Max Charging Current:	5A

Copyright ©2026 SwellPro All Rights Reserved

Charger	
Input	100~240V
Output：	25.2V
Max Charging Power:	150W
Supported battery types and cells:	6S LIHV
Size:	143*100*60mm
Weight:	454.6g
Working Temperature：	0°C ~60°C
Storage Temperature:	0°C ~60°C

Gimbal camera（Advanced）	
Waterproof Rating:	IP67
Axis：	1-axis (tilt)
Controllable range:	tilt: -90° to 0°
Max control speed:	tilt: 30°/s
Weight：	176.5g
Size：	79*69*70mm
Sensor:	1/2.3 CMOS, 12M
Lens:	F4.5mm f/2.65, FOV: 92.6°
ISO Range:	100-3200
Shutter Speed	16 - 1/16000 s
Photo Resolution:	4000*3000（4:3），3840*2160（16:9）
Burst Mode：	3/5/10 pcs
Video Resolution:	4K: 30fps ， 2.7K: 60fps ， 1080P: 120/60/30fps，720P: 240/120/60fps
Max Video Bitrate:	60M
Photo Format:	JPEG/DNG(RAW)
Video Format:	MP4/MOV
Memory Card:	MicroSD card with a maximum capacity of 128GB, write speed ≥ 65 MB/s, supports U3 or UHS-1 rating
Working Temperature：	-10°C -40°C

Payload Release	
Waterproof Rating:	IP67
Max Payload Capacity:	2000g
Size:	75*50*37.5 mm
Weight:	100g

Copyright ©2026 SwellPro All Rights Reserved

Warranty Information

Please visit the SwellPro support website https://www.swellpro.com/pages/support-center for warranty information.

Battery Care and Maintenance

- Do not allow the batteries to come into contact with any kind of liquid.
- Do not drop the battery into the water.
- Do not leave batteries out in the rain, or near any sources of moisture. If the inside of the battery comes into contact with water, chemical decomposition may occur, potentially resulting in the battery catching on fire, and may even lead to an explosion.
- Never use or charge swollen, leaky, or damaged batteries. If your batteries are abnormal, please contact SwellPro or a SwellPro authorized dealer for further assistance.
- The battery can be used in temperatures ranging from -10°C to 40°C. Using the battery in environments above 60°C can lead to a fire or explosion. Using the battery below -10°C can lead to permanent damage.
- Never disassemble, or penetrate the batteries with sharp objects, otherwise, this may result in the battery catching fire, or even lead to an explosion.
- Electrolytes in the battery are highly corrosive. If any electrolytes make contact with your skin or eyes, immediately wash the affected area with fresh running water for at least 15 minutes, and then see a doctor immediately.
- If the battery falls into the water, pick it up immediately and put it in a safe and open area. Maintain a safe distance from the battery until it is completely dry. Never use the battery again, and dispose of the battery properly as described in the Battery Disposal section below.
- Do not heat batteries. A battery fire can be extinguished using sand, or a dry powder fire extinguisher.
- Do not put batteries in a microwave oven, or a pressurized container.
- Do not put the loose battery cells onto any conductive surface, such as a metal table.
- Do not put any conductive cables or metal objects together with batteries, where they may short-circuit against each other.
- Do not drop or strike batteries.
- Do not place heavy objects on the batteries or the battery charger.
- Clean battery terminals with a clean, dry cloth. Failure to do so may result in poor electrical contact, which could reduce the battery capacity, or damage the charger.
- Do not continue to fly the aircraft after the low battery alarm has been activated; this will result in over-discharging the battery, and potentially could damage the battery cells.

Copyright ©2026 SwellPro All Rights Reserved

Precautions for low-temperature use

- When the battery is used in a low-temperature environment (-10°C to 5°C), the battery capacity and flight time will be drastically reduced. It is recommended to take off when the battery is fully charged. Please fully charge and keep the battery warm before use.
- In a low-temperature environment, it is recommended to preheat the battery to above 5°C before flying, and it is better to preheat it to above 20°C.
- Before flying in a cold environment, insert the battery into the aircraft to warm up for 1 to 2 minutes, and take off after the battery is fully warmed up.

Battery Charging

- Always use a SwellPro Approved charger to charge the battery of the aircraft. SwellPro takes no responsibility if the battery is charged using a non-SwellPro charger.
- To avoid any potential accidents happening, please do not leave the battery charging unattended.
- Do not charge the battery near flammable materials, or on flammable surfaces, such as carpets or wood.
- Disconnect the charger when not in use.
- Do not clean the charger with denatured alcohol or other flammable solvents.
- Never use a damaged charger.

Battery Storage and Transportation

- If the flight battery is not being used for a long period of time, ensure to set the battery to store voltage (**22.8V~23.2V**). The remote control is charged to **3 bars or above** and saved. And use the "battery storage" function of the charger to perform maintenance on the flight battery every 3 months. At the same time, charge the remote control to **3 bars or more** to maintain battery activity and prevent over-discharge.
- **Please do not leave the flight battery and remote control unattended for a long time (more than 3 months)**. Since the battery will slowly self-discharge, not charging it for a long time will cause the battery to over-discharge and cause permanent damage.
- Keep batteries out of the reach of children and pets.
- Do not leave the battery near heat sources, such as a furnace, heater, or exposure to strong direct sunshine, for example: in cars.
- The ideal storage temperature is 20°C ~ 28°C.
- Keep the battery in a dry and ventilated environment.
- Never drop the battery into the water, or store it in places where there is a possibility of water leakage.
- Do not drop, strike, impale, pierce, or manually short-circuit the battery.

Copyright ©2026 SwellPro All Rights Reserved

- Keep the battery away from metal objects, such as watches, jewelry, and hairpins.

Battery Disposal

- Dispose of the battery in specific recycling boxes only after a complete discharge.
- DO NOT place the battery in regular trash containers. Strictly follow your local regulations regarding the disposal and recycling of batteries.

Maintenance

- After flying over the sea, sand, or water, the Fisherman FD3 and modules must be thoroughly washed with fresh water within 2 hours and dried - especially the motors, gimbals, and camera.
- It is strongly advised to rinse the aircraft before any salt crystallizes, If crystals have already formed, they should be soaked thoroughly (for 15-30 minutes) and cleaned.
- Motors are best rinsed by removing the propellers and immersing the motors one at a time in a bucket of fresh water.
- In the event of the Fisherman FD3 not being used for a long time, please store the aircraft and the batteries in a dry, and ventilated environment at 20°C~28°C, appropriate humidity range between 40%~60%.

Refer to the Maintenance manual for more maintenance information.

Disclaimer and Warning

This product is not a toy and should only be operated by persons over the age of 18. Please keep it out of reach of children and pay particular attention to the possible scenarios of children unexpectedly Appearing during flight operations.

Be sure to read this document carefully before using the product, to fully understand your legal rights, responsibilities, and safety instructions. Failure to do so may cause property damage, accidents, and personal injury. Once this product is used, it is deemed that you have understood, recognized, and accepted all the terms and conditions of this statement.

The user is responsible for all the consequences of his actions and the use of the product. The user agrees to use the product for his sole & legal purpose and agrees with the terms & conditions of this agreement, and other relevant policies & guidelines that may be specified by SwellPro.

Under the maximum permitted by law and Approved circumstances, SwellPro accepts no liability for any indirect, punitive, consequential, special, or criminal damages, including the purchase cost, or loss of income due to the loss of use of the aircraft.

 Copyright ©2026 SwellPro All Rights Reserved

SwellPro is exempt from the user's liabilities for damage(s) to person/s or property, or injuries incurred directly or indirectly from the use of this product in the following conditions:

- Damage or injuries incurred when the user/s are under the influence of alcohol, drugs, or medication.
- Any malfunction caused by operators' failure to follow the guidance of the manual to assemble and set up or operate the aircraft as described and designed.
- Damage or injuries may occur due to failure to study the tutorial videos and the user manual before flying the aircraft.
- Damage or injuries incurred as a result of the use or installation of any unauthorized third-party accessories or counterfeit parts - which were not provided and Approved by SwellPro.
- Damage or injuries as a result of flying the aircraft out of eyesight range, or more than 300m away from the controller.
- Damage or injuries caused by flying the aircraft in areas of magnetic fields & radio interference.
- Damage or injuries caused by flying in a NO-FLY ZONE that is regulated by local laws & rules.
- Damage or injuries including crashes, loss of control, or water ingress caused by abusing or modifying the original aircraft structure,
- Damage or injuries caused by using broken & aging components.
- Damage or injuries caused by continuing to fly the aircraft even if the low battery alarm is activated.
- Damage or injuries caused by failure to wash the components with fresh water after flying over or near the sea & corrosive waters.
- Damage or injuries that have occurred when the aircraft has been subjected to the following conditions or situations: collision, fire, explosion, floods, tsunamis, ice, snow, avalanche, flooding, landslide, earthquake, etc.
- Damage or injuries incurred by intentionally dropping or crashing the SplashAircraft into the water from a high altitude, especially water ingress into the aircraft fuselage and gimbal malfunction.
- Damage due to not following the user manual and maintenance manual properly.
- Damage caused by operating the product at a weight greater than the safe takeoff weight, as specified by instruction manuals.
- For any reason, the user cannot retrieve the aircraft for further diagnosis and examination.
- The user is not able or unwilling to provide the flight log to SwellPro for diagnosis and examination.
- Any attempt to modify flight log data noticed by SwellPro.
- Other Damage(s) or injuries that are not SwellPro's liability.

Copyright ©2026 SwellPro All Rights Reserved

FCC Caution

This device complies with part 15 of the FCC Rules. Operation is subject to the following two conditions:(1) This device may not cause harmful interference, and (2) this device must accept any interference received, including interference that may cause undesired operation.

Any Changes or modifications not expressly approved by the party responsible for compliance could void the user's authority to operate the equipment.

Note: This equipment has been tested and found to comply with the limits for a Class B digital device, pursuant to part 15 of the FCC Rules. These limits are designed to provide reasonable protection against harmful interference in a residential installation.

This equipment generates uses and can radiate radio frequency energy and, if not installed and used in accordance with the instructions, may cause harmful interference to radio communications. However, there is no guarantee that interference will not occur in a particular installation. If this equipment does cause harmful interference to radio or television reception, which can be determined by turning the equipment off and on, the user is encouraged to try to correct the interference by one or more of the following measures:

-Reorient or relocate the receiving antenna.

-Increase the separation between the equipment and receiver.

-Connect the equipment into an outlet on a circuit different from that to which the receiver is connected.

-Consult the dealer or an experienced radio/TV technician for help.

This equipment complies with FCC radiation exposure limits set forth for an uncontrolled environment. This equipment should be installed and operated with minimum distance 20cm between the radiator your body.

Version Information

SwellPro products are constantly improving, as the product user guides. It is recommended to visit www.swellpro.com to check and download the latest user guide.

Version

1.0 Fisherman FD3 User Manual 1.0 Edition

1.1 Fisherman FD3 User Manual 1.1 Edition

- Update on Charging.

1.1.1 Fisherman FD3 User Manual 1.1.1 Edition

- Update on Specification.

1.1.2 Fisherman FD3 User Manual 1.1.2 Edition

 Copyright ©2026 SwellPro All Rights Reserved

- Update on Specification.

1.1.3 Fisherman FD3 User Manual 1.1.3 Edition

- Update on Remote Controller Screen.

1.1.4 Fisherman FD3 User Manual 1.1.4 Edition

- Update on Remote Controller.

1.1.5 Fisherman FD3 User Manual 1.1.5 Edition

- Update on Flight Battery – charging.

1.1.6 Fisherman FD3 User Manual 1.1.6 Edition

- Update on FCC caution and the Remote Controller - display setting.

1.1.7 Fisherman FD3 User Manual 1.1.7 Edition

- Update on specification – remote controller waterproof level and Maintenance.

1.1.8 Fisherman FD3 User Manual 1.1.8 Edition

- Update on support website and warranty information.

1.1.9 Fisherman FD3 User Manual 1.1.9 Edition

- Update on RID Display Information.

Copyright ©2026 SwellPro All Rights Reserved