FisherMan FD1

User Manual



Visit www.swellpro.com for the latest version of this manual and firmware updates for your drone and accessories.

Fisherman FD1

Model：FD1

v1.4.2 – 2024.04

Thank You

Thank you for purchasing the SwellPro Fisherman (FD1). We have designed and manufactured the SwellPro Fisherman to the highest quality standards.

Like any precision electronic device, long and trouble-free operations rely on proper care and maintenance. With proper care and maintenance, you should enjoy your drone for many years to come.

It is important to familiarize yourself with the features of this unique drone by carefully studying this manual.

Visit www.SwellPro.com for the latest manuals, firmware. Refer to the Version Information section at the end of this manual, which details additions and corrections to this manual.

Using this Manual

This document is designed to be printed or viewed on a computer or mobile device. If used electronically, you can search directly for terms like “Propeller” to find references. Additionally, you can click on any topic in the Table of Contents to navigate directly to that topic.

Video Tutorials

Visit and subscribe to the SwellPro YouTube channel for tutorial videos and product information. Scan this QR code with your camera phone to go to our channel.



 ©2024 SwellPro All Rights Reserved

Social Media

Join our SwellPro Facebook page to meet other users who share their adventures with SwellPro. www.facebook.com/SwellPro/



Register Product Warranty

Please register your product to ensure warranty coverage.

www.swellpro.com > support > register your product

©2024 SwellPro All Rights Reserved

Contents

Thank You 2
Using this Manual 2
Video Tutorials 2
Social Media 3
Register Product Warranty 3
Contents 4
Product Overview 7
Aircraft Diagram 8
Remote Controller Diagram 9
Remote Controller Screen 10
Install the Aircraft 11
Install Propellers 12
Install/Removal of GPS Cover 13
Flight Battery 13
Charge 13
Install the Battery 14
Aircraft 16
Aircraft Status Indicator 16
Low Battery Warning 17
Waterproof Barometric Membrane 18
Remote Controller 20
Using the Remote Controller 20
Power On/OFF 20
Flight Mode Switch 20
Return to Home (RTH) 20
Payload Release 21
Control the Aircraft 21

©2024 SwellPro All Rights Reserved

Controller Pairing 23
Flight 23
Flight Safety and Environment 24
Flight Restrictions 25
Pre-Flight Checklist 25
Compass Calibration 26
Gyroscope Calibration 27
IMU Calibration 28
Basic Flight Steps 29
Starting/Stopping Motors (Arming the Drone) 29
Water Takeoff and Landing 31
Boat Takeoff and Landing 31
Power Flip 32
Flight Mode 32
Return to Home (RTH) 32
Low Battery Auto Return to Home 33
Low Battery Auto Payload Release 33
Payload Module 34
Payload Release 34
FPV Camera 34
SwellPro Goggle (GL1) 35
TrollSafe (Optional) 36
Appendix 37
Specification 37
Flying Guide 38
Image Transmitter Settings 39
Set Frequency Channel 40
Set Transmitted Power 40

©2024 SwellPro All Rights Reserved

Warranty Information 41
Maintenance and Storage 41
Battery Care and Maintenance 42
Precautions for low-temperature use 42
Battery Charging 43
Battery Storage and Transportation 43
Battery Disposal 43
Disclaimer and Warning 44
Version Information 45

 ©2024 SwellPro All Rights Reserved

Product Overview

SwellPro Fisherman (FD1) is specifically designed by SwellPro for fishing enthusiasts and the drone fishing community. SwellPro has been focusing on the making of the world's first and the best waterproof drones since 2015. Now, we put our focus on the making of the best fishing drone. FD1 was designed solely for drone fishing from day one. We simplify the design for an easy operation and maintenance of the drone yet remain the powerful propulsion system for swift flying and great payload capacity. Together with the FPV camera, payload release, and TrollSafe modules, SwellPro Fisherman is going to be your best fishing partner.

©2024 SwellPro All Rights Reserved

Aircraft Diagram

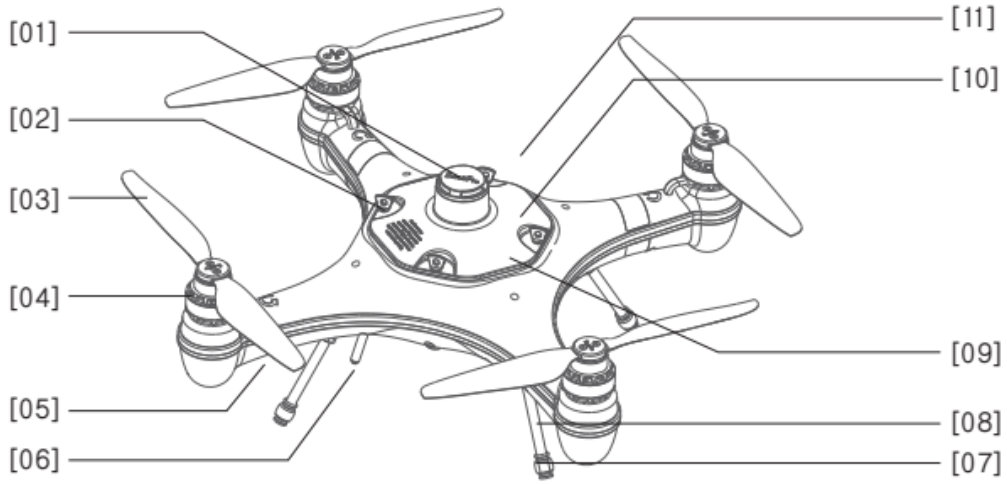

[01] Barometric Membrane Cover
[02] GPS Cover Lock
[03] Propeller
[04] Motor
[05] Aircraft Status Indicator
[06] Antenna
[07] Rubber Foot
[08] Landing Gear
[09] GPS Cover
[10] Flight Control LED Indicator (see-through)
[11] Aircraft Head
[12] Power Button
[13] Payload Release

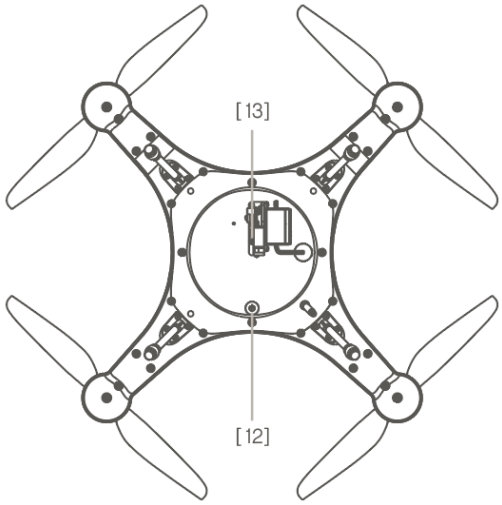

©2024 SwellPro All Rights Reserved

Remote Controller Diagram

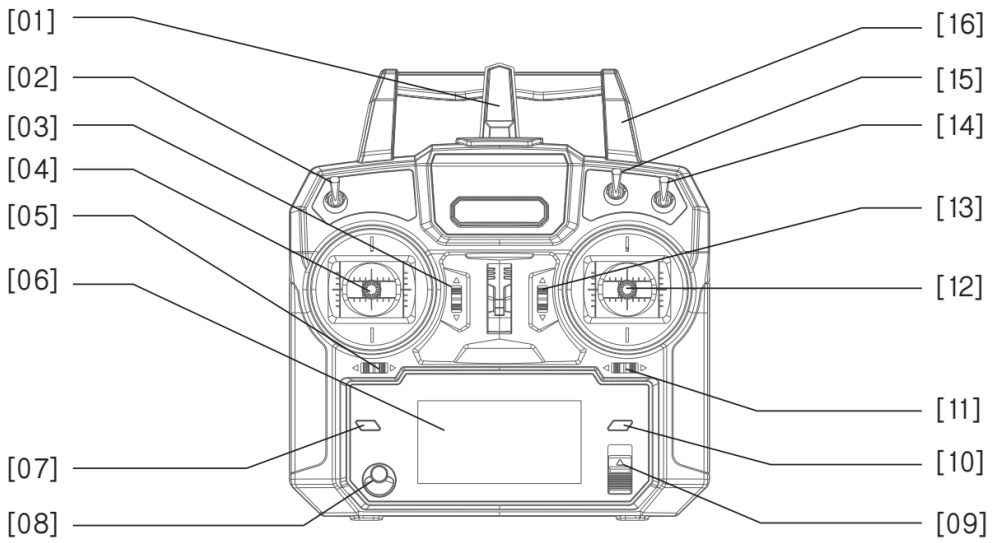

⚠ SwellPro Fisherman's remote controller is **NOT** waterproof. Please stay out of water when using it.

[01] Antenna

[02] Payload Release Toggle

[03] Throttle Rudder Adjustment

[04] Left Joystick (Throttle/Yaw)

[05] Yaw Calibration Adjustment

[06] Display

[07] Display Page Up

[08] Pairing Button

[09] Power Slider

[10] Display Page Down

[11] Roll Calibration Adjustment

[12] Right Joystick (Pitch/Roll)

[13] Pitch Calibration Adjustment

[14] Flight Mode Toggle

[15] Return-to-Home Toggle

[16] Handle

💡 **Drone GPS Location Accuracy ranges from 1-10 with 10 being the highest accuracy.**

©2024 SwellPro All Rights Reserved

A rating of 10 indicates a drone location accuracy <1m. 9=1.1 meters; 8=1.2 meters, 7=1.3 meters, 6=1.4 meters, 5=1.5 meters. In GPS mode, it is recommended to take off with at least 5.

💡 To reconfigure throttle modes:

1. Hold the left and right throttle to the lower left, then turn on the remote control to enter the factory setting page.

2. Press [10] to select “Def sticks mode”. Then turn [5] to the left to enter.

3. Press [7] or [10] to switch throttle mode. The default throttle mode is Model 2.

4. After switch to the desired throttle mode, turn [11] to the right to exit the page. Restart the remote control to finish the reconfiguration.

Note: Changing the throttle modes changes the lock/unlock gestures accordingly.

Mode 1 & Mode 2: Use inward gesture to unlock the aircraft, outward gesture to lock the aircraft.

Mode 3 & Mode 4: Use outward gesture to lock the aircraft, inward gesture to unlock the aircraft.

Remote Controller Screen

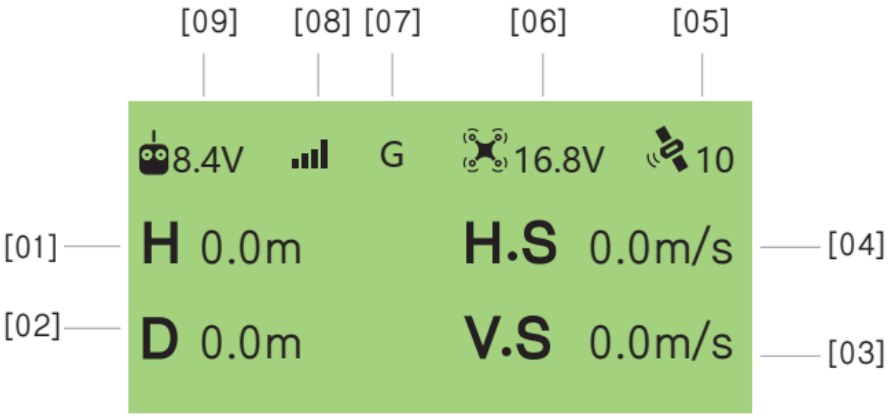

[01] Drone Height
[02] Drone Distance
[03] Vertical Speed
[04] Horizontal Speed
[05] Satellite Signal
[06] Drone Battery Voltage
[07] Flight Mode (G: GPS/ H: Headless/ A: ATTI)
[08] Remote Controller Signal
[09] Remote Controller Battery Voltage

©2024 SwellPro All Rights Reserved



[10] Pitch Angle
[11] Yaw Angle
[12] Latitude
[13] Longitude
[14] Flight Time
[15] Roll Angle

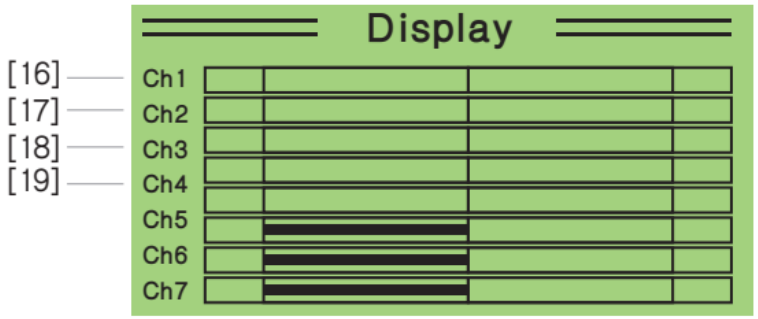

[16] Roll Channel
[17] Pitch Channel
[18] Throttle Channel
[19] Pan Channel

If Ch1-Ch4 shows any volume (indicate by the black bar) when you are not controlling the joystick. You need to calibrate the channel accordingly. Use the calibration adjustment slider by the joystick to calibrate the joystick input.

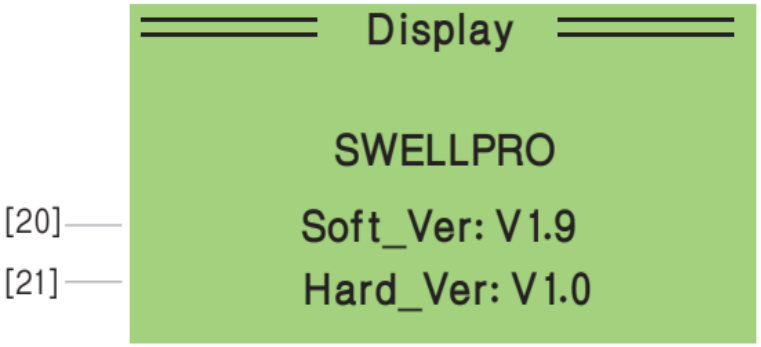

[20] Firmware Version
[21] Hardware Version

Install the Aircraft

The SwellPro Fisherman has two pairs of propellers - two clockwise propellers and two counter-clockwise propellers. The hub of each motor shows the type of propeller used for that motor. Propellers should not be attached to the wrong motors.

©2024 SwellPro All Rights Reserved

Install Propellers

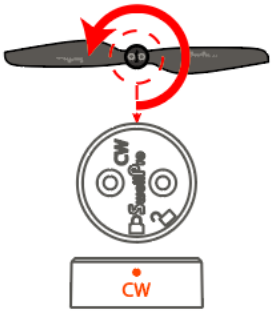

Counter-Clockwise Installation

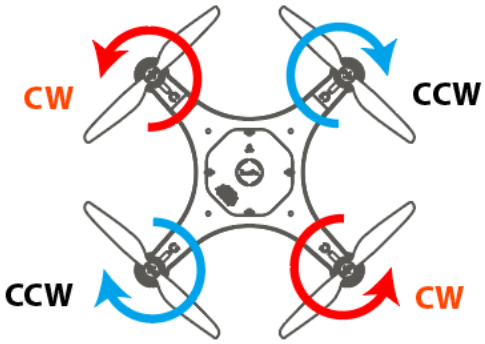

Propeller Installation Direction

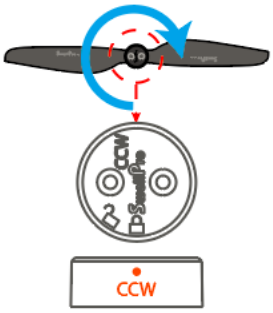

Clockwise Installation

To install or remove propellers:



1. Check the propeller's marking (CW/CCW) to see if it matches the motor. CCW propellers to CCW motors, same for CW.
2. Place the propeller on the motor, rotate the propeller in the hub for 1/8th of a turn until it engages.
3. Hold the arm of the aircraft tight with one of your hands.
4. Rotate the propellers in the direction indicated by the lock signs with your other hand.
5. To remove the propeller, repeat steps 3&4.

⚠ Always place one hand under the motor to support it when installing or removing propellers. Failure to provide this support could result in bending or breaking the landing gear.

⚠ The propellers are sharp, please be careful to avoid injury.

⚠ Before each flight, please check that the propellers are smooth all over and are correctly installed and securely fastened.

⚠ Spin each propeller by hand to check that the motors are free of sand or salt and spin freely.

©2024 SwellPro All Rights Reserved

Install/Removal of GPS Cover

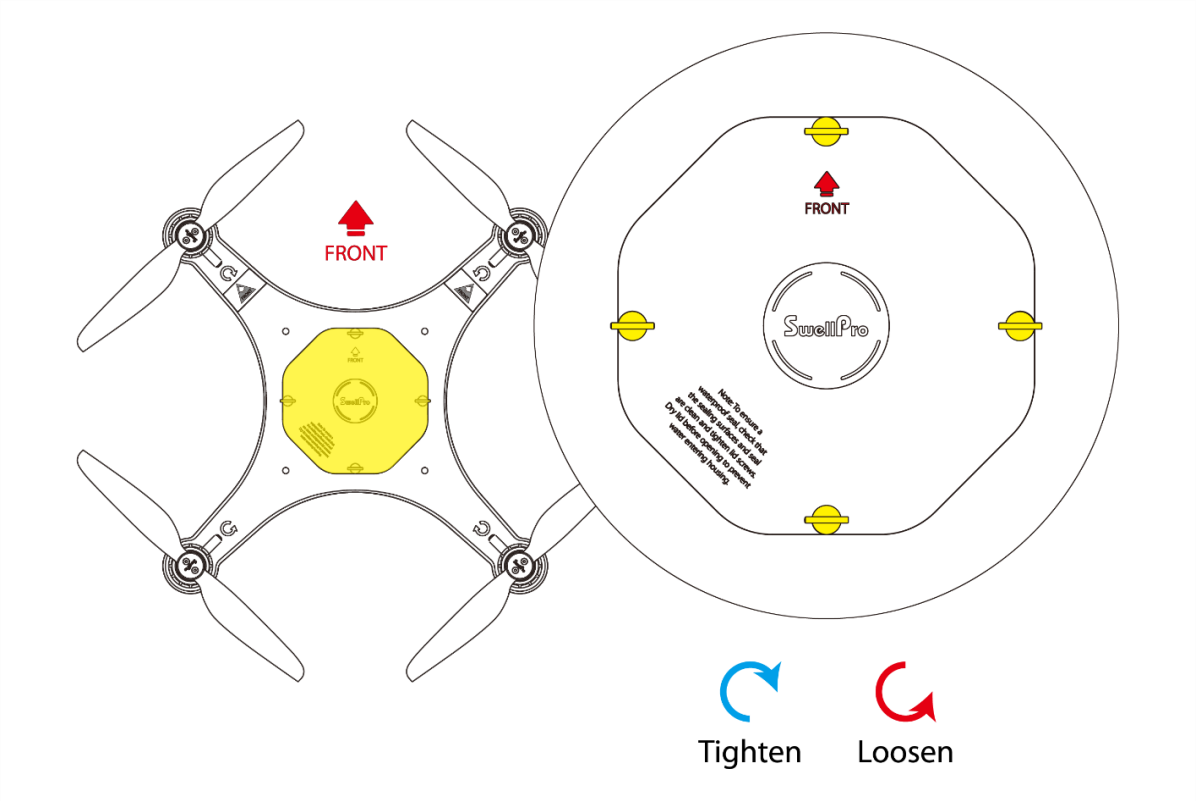

⚠ Ensure to align the **FRONT** **arrow** to the front of the aircraft. Failure to do so may result in aircraft out-of-control and crashing.

⚠ When installing the GPS cover, ensure the sealing is clean and free of sand. Otherwise, it might lead to water ingress.

⚠ When installing the GPS cover, tighten the knobs properly. Don't tighten it too much. Otherwise, the GPS cover might be distorted and affect the ingress protection.

Flight Battery

Ensure to fully charge the battery before flying.

Charge

Connect the balance charger to a power outlet. Then connect the battery's balance charging cable (white plug) to the balance charger.

©2024 SwellPro All Rights Reserved

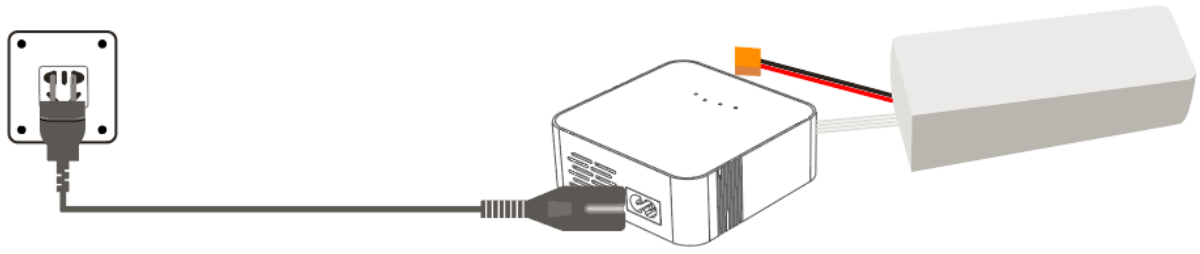

Charging Status

LED4	LED3	LED2	LED1	Battery Level
■	■	■	■	75~100%
■	■	■	□	50~75%
■	■	□	□	20~50%
■	□	□	□	<20%

■ Solid

If 4 LED starts flashing while charging the battery, the balance charger might be malfunctioning. Stop charging the battery right away.

ONLY charge the 4S LiHV battery with the balance charger. DO NOT charge any other types of batteries using the balance charger. *Fisherman flight battery is 4S LiHV battery.

Install the Battery

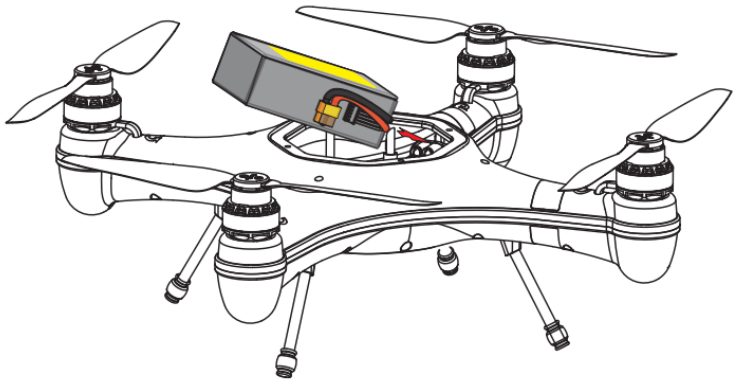

To install the battery:

1. Fold the cables to the right side of the battery.

 ©2024 SwellPro All Rights Reserved

2. Insert the battery into the aircraft chamber at an angle as shown above.

3. Tightly strap the battery with the Velcro strap.

4. Plug the yellow plug into the power port.

⚠ Always strap the battery tightly to prevent the battery from moving or falling out.

©2024 SwellPro All Rights Reserved

Aircraft

Aircraft Status Indicator

There are two types of aircraft status indicators:

1. Aircraft status indicators (red), which are on the front arms.
2. GPS signal status indicators (green), which are on the rear arms.

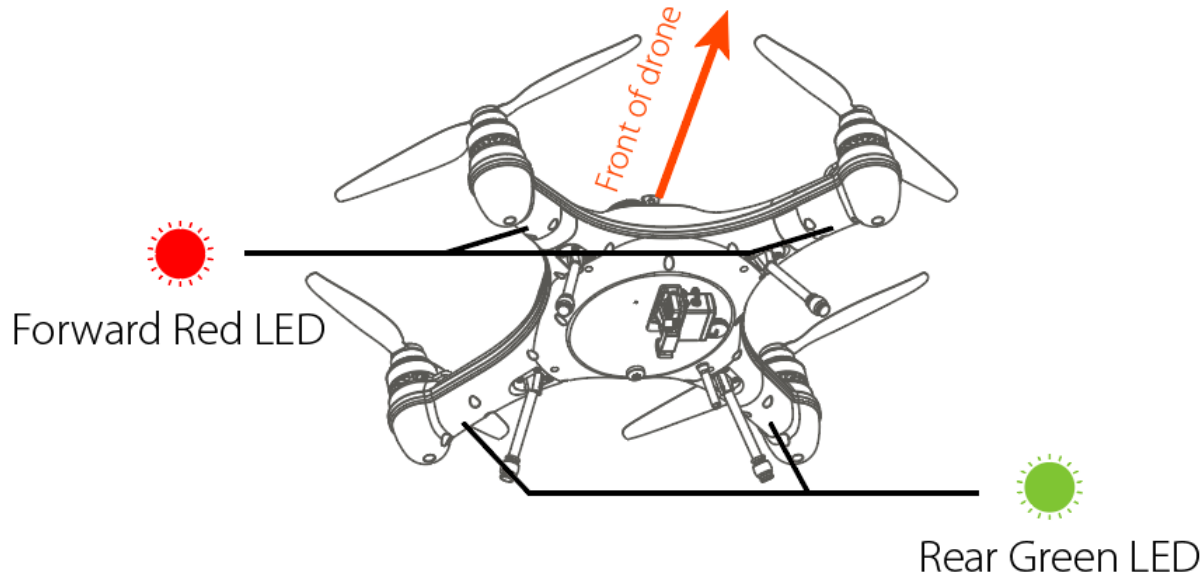

The red LED indicators are used to identify the head of the drone.

©2024 SwellPro All Rights Reserved

All the status indicator messages are going to prompt on the remote controller screen.

GPS Status		
	Solid Green	Good GPS signal
	Fast Flashing Green	Poor GPS signal
Low Battery Warning		
	Flashing Red 4 times	First low battery warning
	Fast Flashing Red	Second low battery warning
	Flashing Red 3 times	Auto returning home
Calibration Warning		
	Red Green Slow Flashing Together	Compass calibration required
	Fast Flashing Green	Rotate aircraft horizontally
	Slow Flashing Green	Rotate aircraft vertically
	Red Green Slow Flashing Together	Gyroscope calibration required
	Red Green Slow Flashing Together	IMU calibration required
	Red Green Flash Alternatively	Aircraft initializing

Low Battery Warning

The FD1 has two low battery warnings to help the pilot manage the drone's battery life. Each time a battery level alarm is activated, the remote controller will beep and vibrate to alert the pilot.

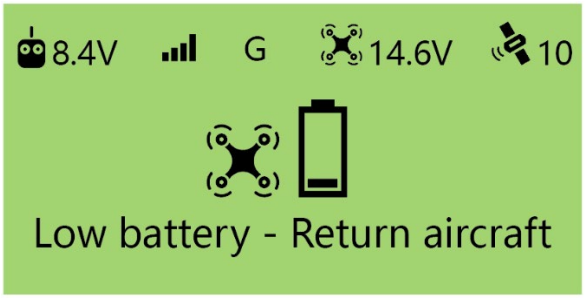

Level 1 alarm: The drone battery level has reached 14.6V. The remote controller screen will prompt "LOW BATTERY; Return Aircraft". Front drone status indicators will flash a pattern of 3 red lights. The aircraft is going to proceed auto payload release, then proceed to auto return-to-home.

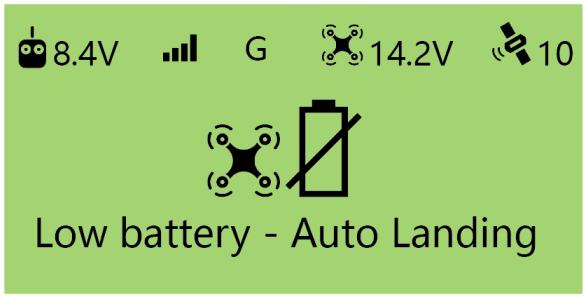

Level 2 alarm: The drone battery level has reached 14.2 V. The battery icon on the remote controller screen will flash. The battery level is now below 10% and you should plan to land the drone safely. The remote controller screen will prompt "Low battery – Auto Landing".

©2024 SwellPro All Rights Reserved

After 10 seconds, the drone will initiate an in-place auto-landing to protect the drone and battery. The front aircraft status indicators are going to flash red constantly.

During auto-landing, you can control the joystick to overwrite the auto-landing and regain control of the drone. However, flying the drone below 14.2 V is highly dangerous since the battery will not be able to maintain the flight and will result in the aircraft crashing.

⚠ During the flight, it is important to constantly monitor the battery level as flying in the conditions like strong wind and rapid movements and heavy load can deplete the battery more rapidly.

⚠ It is dangerous to continue flying the drone below 14.2 V. This could result in damage to the battery and the risk of the drone crashing.

Waterproof Barometric Membrane

The waterproof barometric membrane is SwellPro's featured technology. It allows air to pass through the internal chamber of the aircraft to ensure the barometer's proper functioning yet keeps the water from getting in to ensure the Fisherman's all waterproof design. The waterproof barometric membrane is delicate yet an extremely important part for proper flying and waterproofing. Therefore, you should pay special attention to the proper use of waterproof barometric membrane during your operation.

- Rinse the waterproof barometric membrane thoroughly with freshwater every time after flying.

If the aircraft is not flying stably during hovering, or the aircraft is not flying normally during ascend or descend, the waterproof barometric membrane might be damage. Please take off the top barometric membrane cover and replace the waterproof barometric membrane.

To replace the waterproof barometric membrane:

 ©2024 SwellPro All Rights Reserved

1. Use a sharp tool (such as a knife) to remove the adhesive, then take off the top cover.
2. Peel off the old waterproof barometric membrane. Clean the and make sure there is no residue.
3. Remove the 3M paper from the waterproof barometric membrane and press it firmly on the barometric vent to ensure a tight seal.
4. Attach the adhesive. Then press the top cover down firmly.

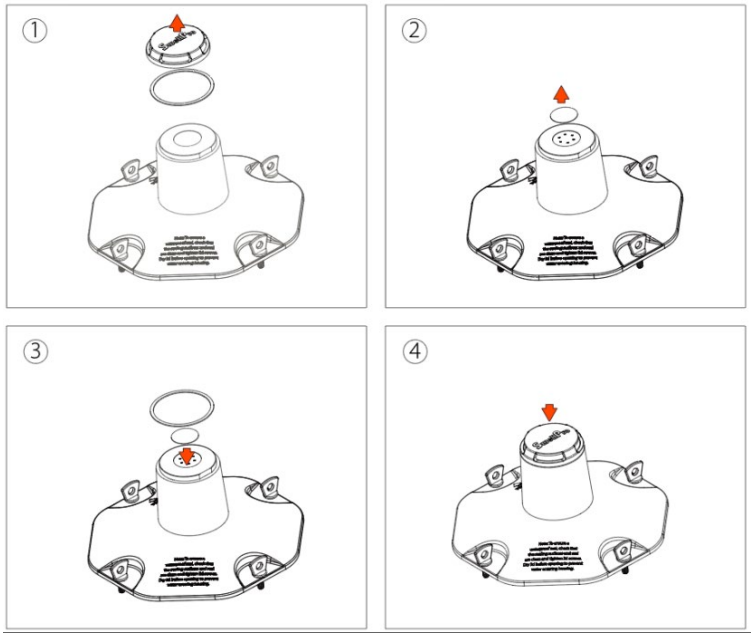

©2024 SwellPro All Rights Reserved

Remote Controller

⚠ SwellPro Fisherman's remote controller is **NOT** waterproof. Please stay out of water when using it.

Using the Remote Controller

Power On/OFF

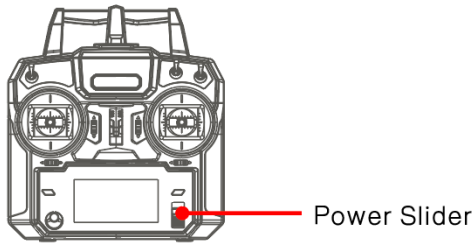

Power On: Slide up
Power Off: Slide down

Flight Mode Switch

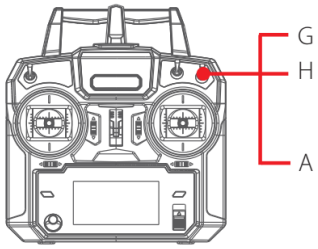

G: GPS mode
H: Headless mode
A: ATTI mode

Return to Home (RTH)

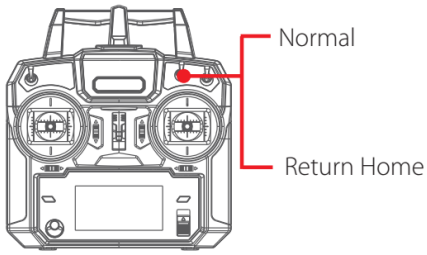

Normal: RTH is off
Return Home: turn on RTH

©2024 SwellPro All Rights Reserved

Payload Release

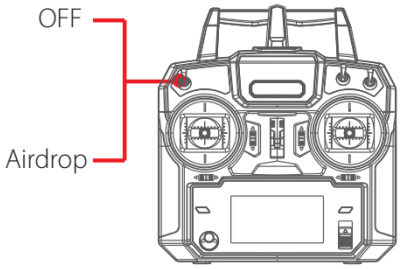

OFF: payload release is off
Airdrop: turn on the payload release

Control the Aircraft

Throttle mode can be reconfigured on the remote controller, refer to the Remote Controller Diagram part for the reconfiguration steps. Default throttle mode is mode 2.

Left Hand Throttle (Mode 2)

Left Joystick **Right Joystick**

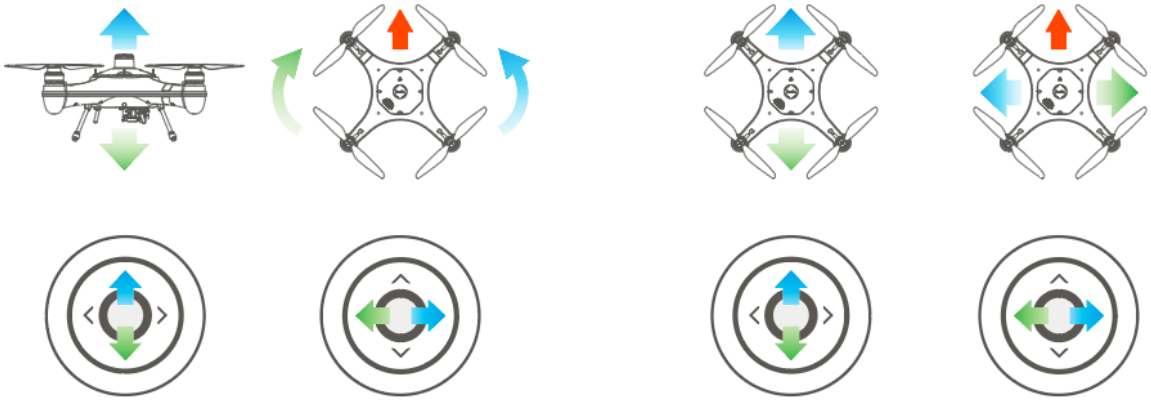

Right-hand throttle (Mode 3)

Left Joystick **Right Joystick**

©2024 SwellPro All Rights Reserved

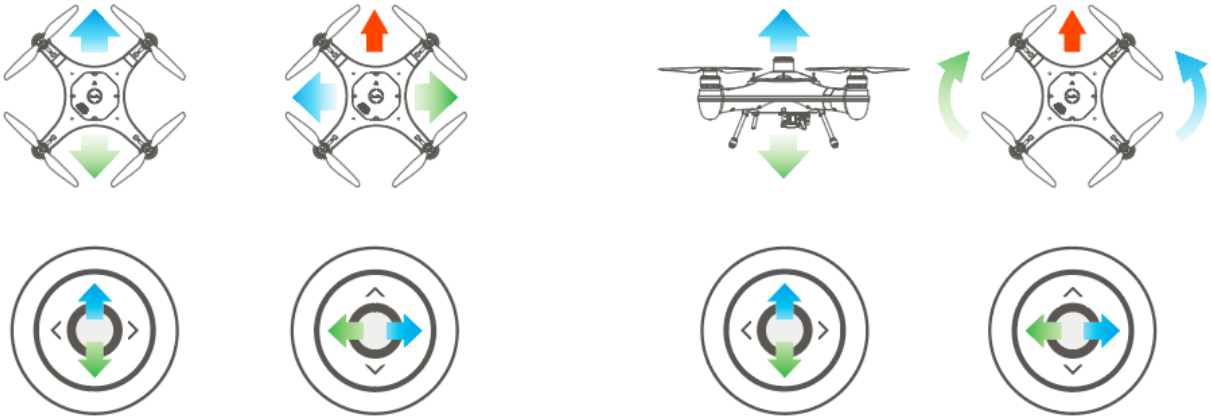

©2024 SwellPro All Rights Reserved

Controller Pairing

To re-pair the remote controller and the aircraft:

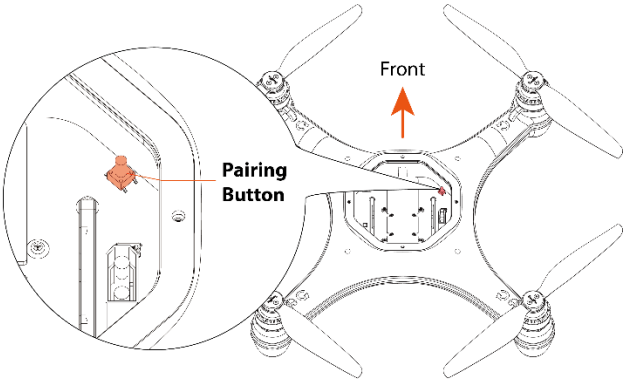

1. Press the aircraft pairing button, then press the power button together to turn on the aircraft.

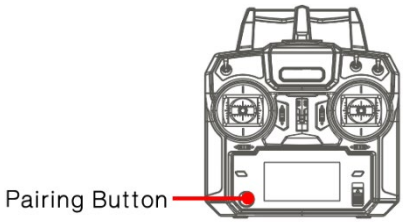

2. Press the remote controller pairing button, then slide up the power slider together to turn on the aircraft.
3. The aircraft and the remote controller will start pairing automatically.

Flight

The drone relies on sensitive sensors to control flight positioning and stability. The SwellPro Fisherman is flight tested before shipment, however, an initial calibration of the compass is required for your first use.

⚠ Before operating the drone from boats/vehicles or other moving and unstable platform, ensure all necessary calibrations have been completed before aboard as some calibrations require a completely stable surface.

⚠ SwellPro Fisherman's remote controller is **NOT** waterproof. Please stay out of water when using it.

©2024 SwellPro All Rights Reserved

Flight Safety and Environment

- Please make sure you have a comprehensive understanding of the FD1, and all the necessary measures required to implement a successful return home function in the event of an emergency.
- If this is your first time flying a drone, please read this manual thoroughly and watch the tutorial videos on our website www.swellpro.com, or our YouTube channels.
- We recommend taking professional training and guidance. When flying, choose an appropriate environment according to your skills. Check all calibrations and choose a large open area to practice.
- It is **strongly** recommended that all drone pilots become familiar with flying in ATTI mode in case of GPS or magnetic interference, which may result in malfunction when flying on GPS mode.
- When experiencing GPS and magnetic interference during the flight, switch to ATTI mode to gain full control and safely return the aircraft manually. Failure to do so and result in aircraft crashing, the pilot takes the full responsibility.
- Please be well prepared before each flight, avoid any violent or excessive operations.
- Please maintain strict compliance with the local laws, any flying in NO-FLY ZONES is prohibited.
- Any illegal & improper use or operation of this product is prohibited.
- Any invasion & violation of another person's right to privacy is not allowed. Before using this product, it remains the duty of the drone pilot to comply with the local laws regarding privacy protection.
- Any invasion or flying over another person/s property is not allowed, please agree with any persons regarding any potential breach of privacy before the proposed flight.
- DO NOT fly the FD1 under the influence of alcohol, drugs, or any other physical or mental impediment.
- Do not fly the drone with a malfunctioning remote controller.
- Please fly the drone away from crowds.

Flight environment requirement

- Always choose the open space as an ideal flying environment.
- Flying between or near tall buildings could adversely affect the functioning of the compass and adversely affect or block GPS and transmission signals.
- During the flight, try to maintain the line of sight with the drone, keep away from obstacles and people.
- Avoid flying near areas with high electromagnetic interference such as power lines or signal towers to minimize the risk of interfering with the remote controller of the drone.

 ©2024 SwellPro All Rights Reserved

- Fly below 4000 meters above sea level as environmental factors including air density and wind shear reduce the performance of the aircraft and battery.
- Before flying in low temperatures, warm the battery to ~25℃ to maximize flight time.
- Although the SwellPro Fisherman is waterproof, do not fly in fog or strong wind conditions. (For wind speed exceeding 20 m/s, or above Beaufort Force 8)

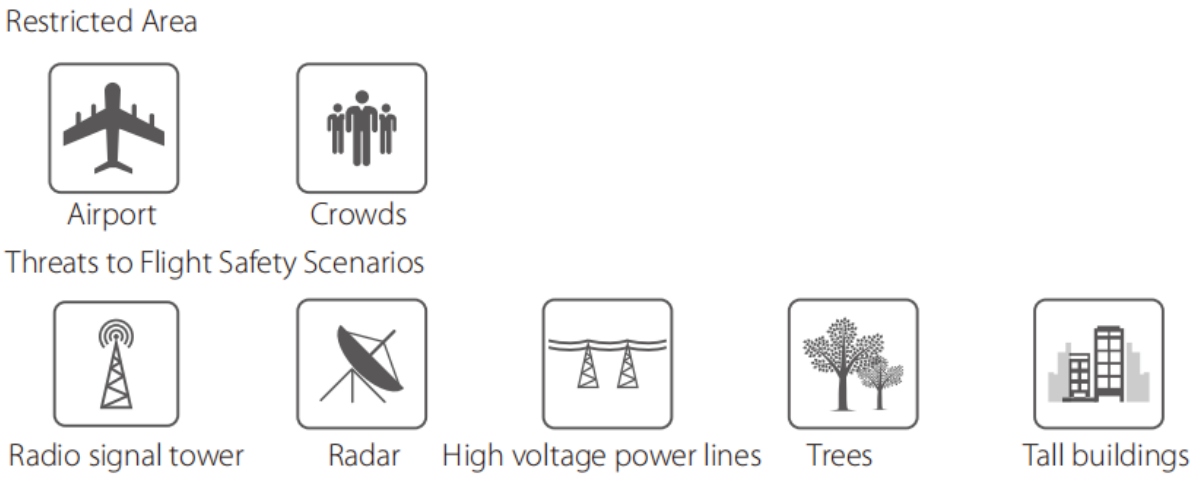

Flight Restrictions

According to provisions of the International Civil Aviation Organization and many national air traffic regulations, drones must be operated in specified airspaces. Please strictly follow the local air traffic regulation accordingly.

Pre-Flight Checklist

- Ensure flight batteries, remote controller, SwellPro FPV Goggle (if applicable) are fully charged.
- Ensure the flight battery is tightly strapped to the aircraft.
- Check all propellers are in good condition and correctly installed.
- Ensure the propeller nuts are tightly screwed.
- Manually rotate the 4 motors to ensure they can spin smoothly.
- The payload module is tightly mounted to the aircraft.
- Ensure the bottom cable connector is tightly screwed.

©2024 SwellPro All Rights Reserved

Compass Calibration

Compass calibration is necessary for any of the following situations:

- The drone is brand new.
- The drone has been repaired.
- The drone is more than 100 km away from the last calibration location.
- The drone has been subjected to strong magnetic fields.
- The drone has been crashed or subjected to the heavy shaking.
- The drone sways or drifts excessively during hovering in GPS mode.
- The remote controller screen prompts "WARNING Compass error Calibrate Compass".

Compass Calibration Process:

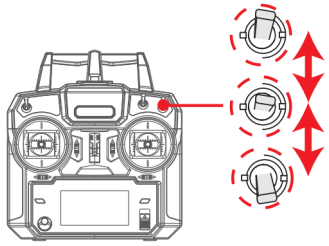

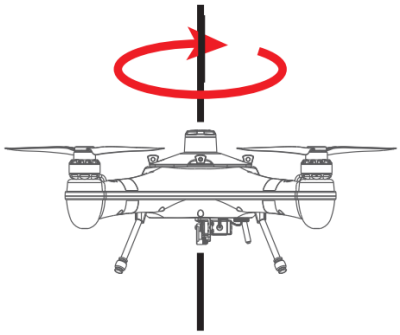

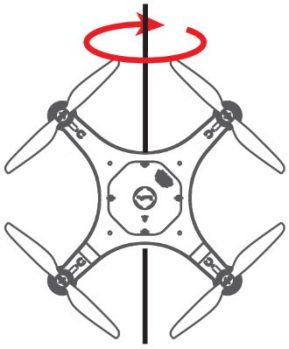

1. Place the drone on a level surface, power on the remote controller then the drone. Wait for the aircraft to connect to the remote controller.

2. After the connection finishes, fast switch the Flight Mode toggle back and forth until the aircraft's rear status indicators flash green, or the remote controller screen prompts "HORIZONTAL CALIBRATION Rotate Drone Clockwise". The drone will now perform compass calibration.

3. Pick up the aircraft and hold the drone horizontally and rotate clockwise about 2~3 turns until the rear indicators slowly flash green or the remote controller screen prompts "VERTICAL Calibration Clockwise NOSE DOWN".

4. Hold the drone nose-down and rotate clockwise about 2~3 turns until the remote controller screen prompts "Initializing...".

5. Place the drone on a level surface for 30 seconds. When the prompt disappears, power off and restart the drone.

6. The compass calibration is complete.

©2024 SwellPro All Rights Reserved

⚠ 1) Compass calibration needs to be performed outdoors in an open area. 2) Remove propellers before calibration. 3) Perform the calibration process away for sources of magnetic fields, such as large metal structures, radio signal towers, power lines or mobile phones, etc.

Gyroscope Calibration

The gyroscope provides stability data to the flight controller. If the gyroscope is not well calibrated, the aircraft will tilt to one side when it takes off, and the tilted angle will increase until the aircraft can no longer fly.

Process gyroscope calibration for the following situations:

- The drone trembles significantly during hovering in GPS mode.
- The drone's tilt range is too large during ascending in ATTI mode.
- The drone drifts during ascending or descending in GPS mode.
- The drone has been crashed or subjected to the heavy shaking.
- The remote controller screen prompts "WARNING Gyroscope error Calibrate Gyroscope".

Gyroscope Calibration Process:

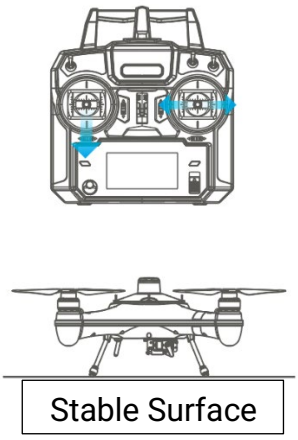

1. Place the drone on a level surface, power on the remote controller, then the drone. Wait for the aircraft to connect to the remote controller.

2. Hold the left joystick down to its lowest position, then quickly move the right joystick left to right, back and forth, until the front and rear status indicators flash alternately, or the remote controller screen prompts "WARNING aircraft Initializing, Please Wait". The drone will now perform gyroscope calibration. Now release the joysticks. This process will be completed in 20 seconds. Do not move the drone during this process.

3. When the front status indicators fast-flashing red and the rear status indicators turn solid green or the "Initializing…"

©2024 SwellPro All Rights Reserved

prompt disappears, power off and restart the drone. Gyroscope calibration is complete.

⚠ 1) Never calibrate the gyroscope on a boat or other moving platforms. 2) When the drone is floating on water, it may occasionally prompt gyroscope calibration, which is normal and can be ignored. 3) If the calibration fails, the "Initializing…" prompt will not disappear, please follow the steps, and try to calibrate again.

IMU Calibration

The Inertial Management Unit (IMU) provides the raw data of the aircraft's attitude in space in nine dimensions. The IMU accelerometer sensor is critical to balance the aircraft in flight.

Proceed IMU calibration for the following situations:

- The drone cannot arm (unlock) the motors after the compass calibration.
- The drone sways or drifts excessively during hovering in GPS mode.
- The drone has been crashed or subjected to the heavy shaking.
- The remote controller screen prompts "WARNING IMU error - Calibrate IMU".

IMU Calibration Process

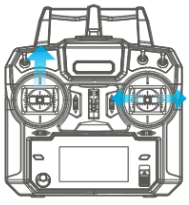

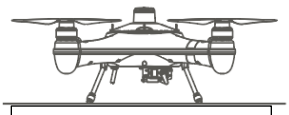

Stable Surface

1. Place the drone on a level surface, power on the remote controller, then the drone. Wait for the aircraft to connect to the remote controller.

2. Hold the left joystick up to its highest position, then quickly move the right joystick left to right, back and forth, until the front and rear status indicators flash alternately, or the remote controller screen prompts "Initializing…". The drone will now perform IMU calibration. Now release the joysticks. This process will be completed in 20 seconds. Do not move the drone during this process.

3. When the front status indicators fast-flashing red and the rear status indicators turn solid green or the "Initializing…" prompt disappears, power off and restart the drone. IMU calibration is

 ©2024 SwellPro All Rights Reserved

complete.

⚠ 1) Never calibrate the IMU on a boat or other moving platforms. 2) When the drone is floating on water, it may occasionally prompt gyroscope calibration, which is normal and can be ignored. 3) If the calibration fails, the "Initializing..." prompt will not disappear, please follow the steps, and try to calibrate again.

Basic Flight Steps

1. Check that the aircraft is correctly assembled.
2. The propellers are correctly mounted and secure.
3. Place the aircraft on flat open ground.
4. Power on the remote controller, followed by the drone.
5. Check the following flight data: flight battery > 16.0V; remote controller battery > 5V; satellite > 5.
6. For your safety, you should stand upwind and at least 3 meters away from the drone.
7. Novice pilots should always take off in GPS mode.
8. Arm the drone.
9. Push the left(throttle) joystick up slowly, allowing the drone to take off smoothly. Release the throttle when the drone is approximately 1.5 m high. Allow the drone to hover for a moment to ensure flight stability.
10. When you need to descend, gently pull down the left(throttle) joystick, allowing the drone to descend and land on a flat surface.
11. After landing, keep the left(throttle) joystick down to its lowest position for 3 seconds until the motors stop, or you can use the disarm joystick command to stop the motors.

Starting/Stopping Motors (Arming the Drone)

Before starting the drone, take the following precautions:

1. Place the aircraft in an open area 3 meters away from yourself and others. After the aircraft is powered on, the system will conduct self-checking. After the self-checking is completed, it will sound a confirmation tone.

2. Novice users should fly in GPS mode.

©2024 SwellPro All Rights Reserved

3. If the aircraft cannot be unlocked due to a week GPS signal, switch to ATTI mode to unlock the aircraft. However, it is not recommended to fly in this mode, as the aircraft's location is not fixed when flying in this mode. Also, keep in mind that taking off the aircraft with no GPS signal will lead to the aircraft not returning to the home point.

Starting (Arming) Motors

Remote controller operation	Description
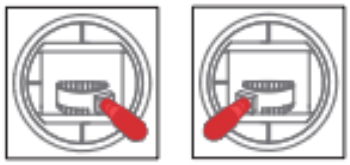	Pull both the left and right joysticks simultaneously down and inwards and maintain this position for 3 seconds. The motors will be unlocked and start rotating.

Stopping Motors (Emergency Stop)

Remote controller operation	Description
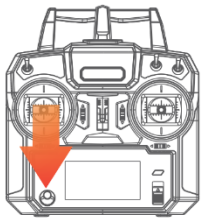	Method 1: After the aircraft has landed on the ground, pull the throttle to the lowest position, and hold for 3 seconds. The motor will be lock and stop rotating. The recommended method for stopping motors.
	Method 2: Pull both the left and the right joysticks downwards and outwards. This method can be used as an emergency stop. ⚠Stopping the motors in flight may cause the drone to crash and should only be carried out in an emergency when stopping the motors will minimize potential damage. (For example, there is a risk that the drone may hit people or crowds)

Note: Changing the throttle modes changes the lock/unlock gestures accordingly.

Mode 1 & Mode 2: Use inward gesture to unlock the aircraft, outward gesture to lock the aircraft.

Mode 3 & Mode 4: Use outward gesture to lock the aircraft, inward gesture to unlock the aircraft.

©2024 SwellPro All Rights Reserved

Water Takeoff and Landing

1. When taking off from choppy water, ascend quickly from the surface to prevent the drone from being affected by a passing wave.
2. When landing on water, descend vertically to the surface. If the drone lands with horizontal speed, it may flip and be inverted. The flight controller will shut down the motors if the drone becomes inverted on the water.

⚠ Do not leave the drone floating inverted for more than a few minutes. Flip the drone using the Power-Flip command or recover the drone as soon as possible to avoid water saturating the waterproof barometric membrane.

Boat Takeoff and Landing

When takeoff or landing from the boat/kayak, PAY EXTRA ATTENTION to the operation, as it can be very difficult and dangerous to operate the aircraft.

- There should be enough space for the drone to take off or land on the boat.
- If there is not enough space on the boat, take off and land on the water can otherwise be a safer, alternative option, as there is sufficient space for the drone to operate.
- When the boat is rocking, the drone may not arm its motors in GPS mode. In this case, carefully take-off in ATTI mode and then switch to GPS mode if the satellite signal is back to.
- Always be aware of the direction of the wind relative to the boat for take-off and landing. Stand in the upwind position relative to the aircraft to prevent the aircraft from drifting toward you when take-off or landing in windy conditions.
- The Smooth+ controls are useful to finely control and balance the drone position during this operation.
- For your safety, it is not recommended to launch or land the SwellPro Fisherman from your hands.
- After initiate return-to-home on the boat, always regain control and land manually when the aircraft is approaching near you.

©2024 SwellPro All Rights Reserved

Power Flip

If the drone becomes inverted on the water, the Power-Flip feature enables the drone to flip back to its upright position.

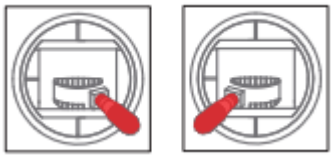

When the drone floating upside-down on the water, pull both the left and right joysticks simultaneously down and inwards and maintain it for 3 seconds. The drone will flip itself automatically to its upright position.

Flight Mode

Flight Modes	Letter	Description
GPS	**G**	In GPS mode, the drone maintains a fixed position and height while hovering (with no input from the remote controller). The maximum flight speed is 10 m/s.
Headless	**H**	In Headless mode, the head orientation of the drone is dismissed. The drone can now move in the direction with respect to your point of view. This makes controlling the drone from afar more intuitive and makes manual return-to-home a lot easier when you cannot see the head direction of the drone.
ATTI	**A**	In ATTI mode, the drone maintains a fixed height but not a fixed position. Therefore, when there is no input to the remote controller, the drone is going to drift with the wind while maintaining its height. The maximum flight speed is 20 m/s.

Return to Home (RTH)

Flight Movement	Description
	After RTH is initiating, if the aircraft's height is > 20m and >15m away from the home point, the aircraft is going to maintain its height and return home.

 ©2024 SwellPro All Rights Reserved



If the aircraft height is < 20m and >15m away from the home point, the aircraft is going to ascend to 20 m, then return to home.

⚠ If the aircraft's GPS signal is too weak (GPS signal shows 0), the aircraft is not able to initiate RTH.

⚠ During RTH, you can take over the flight by controlling remote controller joysticks. When there is no input from the remote controller, the aircraft is going to continue the RTH process.

⚠ Keep your eyes on the aircraft during the RTH process, watch out for any obstacles on the flight path.

Low Battery Auto Return to Home

Low battery auto RTH will initiate when the drone intelligent battery reaches Level 1 low battery warning.

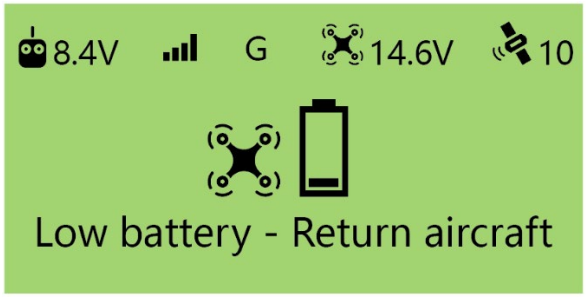

Level 1 alarm: The drone battery level has reached 14.6V. The remote controller screen will prompt “LOW BATTERY; Return Aircraft”. Front drone status indicators will flash a pattern of 3 red lights. The aircraft is going to proceed auto payload release, then proceed to auto return-to-home.

Low Battery Auto Payload Release

Low battery auto payload release is used to increase the RTH possibility when the aircraft is attached to a heavy load. Low battery auto payload release will be initiated when the aircraft reaches level 1 low battery warning. On level 1 low battery warning, the aircraft will automatically release the payload then initiates low battery auto Return-to-Home process.

©2024 SwellPro All Rights Reserved

Payload Module

Payload Release

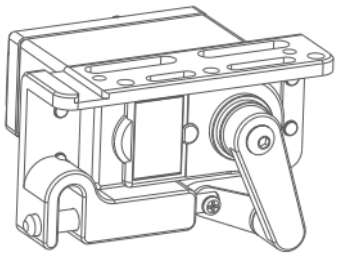

This easy-to-use, light-weight yet durable payload release module enables you to carry out long-distance bait drop for up to 2 kg.

FPV Camera

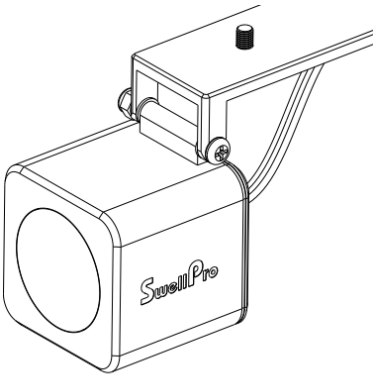

The FPV camera gives you a pair of eyes during drone fishing. The camera provides a WDR vision, together with SwellPro Goggle (GL1), you are going to search for where fishes are from above and accomplish precision bait drop.

©2024 SwellPro All Rights Reserved

SwellPro Goggle (GL1)

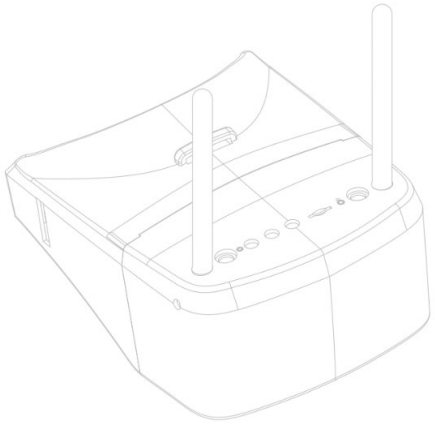

GL1 is the carefully crafted FPV Goggle by SwellPro. It features smooth, high-definition wireless graphics transmission to give you an immersive fly experience. The modular, easy-to-assemble design allows you to enjoy the visual experience in different forms.

Different ways of using SwellPro Goggle

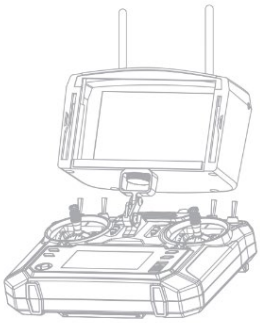

Remote Control Stand
Detach the display module from the headset. The display module can be mounted to the remote control using the FD1 remote control connector.

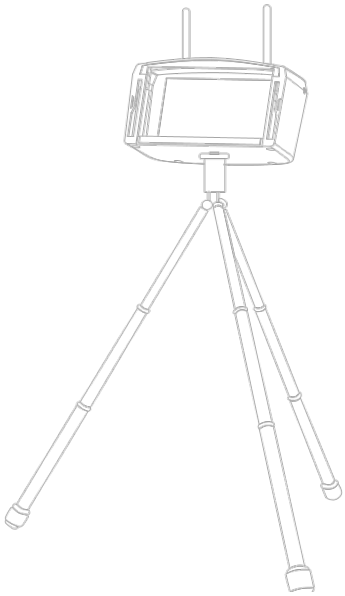

Tripod Mode
The displace module can also be mounted to any tripod using the M6 tripod screw.

©2024 SwellPro All Rights Reserved

TrollSafe (Optional)



TrollSafe is an adjustable tension release module. When the tension exceeds the set tension, the attached bait is going to release. TrollSafe is great for bait luring.

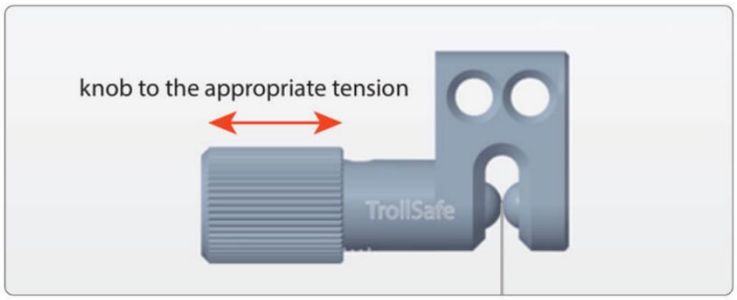

©2024 SwellPro All Rights Reserved

Appendix

Specification

Aircraft	
Waterproof	IP67
Weight	2190 g (Include battery & propellers)
Dimension	372*372*247 mm (propellers excluded)
Max Ascend Speed	4 m/s
Max Descend Speed	4 m/s
Max Flight Speed	20 m/s
Max Flight Height	120m (GPS); 1.3km (ATTI)
Max Wind Speed Resistance	8m/s; 11-16 knots (F4) Wind gust: 14 m/s (F7) Peak
Hovering Precision	± 0.5 m
Max Flight Time	30 min
Max Flight Distance	1.3 km
Max Take-off Weight	3.7 kg
Max Payload Capacity	2 kg
GNSS	GPS/GLONSS
Flight Control	SwellPro S4
Motor	#3509/740Kv
ESC	40A (32-bit reflux)
Propeller	#1242 carbon fiber quick release propellers
Working Temperature	-10℃ - 40℃
Battery	4S 15.2V 6500mAh LiHV
Battery Weight	630 g
Charge Time	90 min

Remote Controller	
Weight	378 g (battery not included)
Dimension	174*89*190 mm
Operating Frequency	2405 – 2475 MHz
Bandwidth	5000 kHz
Codec	GFSK
Range	1.3 km
Transmitter Power (EIRP)	< 20dBm Sensitivity: -105dBm
Channel	6

©2024 SwellPro All Rights Reserved

Battery	6V (1.5V AAx4)

PL1-F	
Waterproof	IP67
Weight	90 g
Dimension	60.7*36.2*50 mm
Cable Length	220 mm
Max Payload Capacity	2 kg

PL2-F	
Waterproof	IP67
Weight	150 g
Dimension	122.5*50*39 mm
Cable Length	160 mm
Max Payload Capacity	2 kg
FPV Camera	
Sensor	1/2.7” WDR sensor (Wide Dynamic Range)
Lens	F/2.5; f/2.1
Resolution	2000 TVL | 800x480
Input Voltage	5 – 36 V

Flying Guide

- Many regulations require the pilot to fly a drone within line of sight. Take particular care when flying a drone out of sight.
- Unless it is an emergency, NEVER Lock or STOP the motors in flight as this will cause the drone to fall to the ground and crash.
- When the low battery level warning is activated, plan to return the drone and land safely before the battery reaches a critical level.
- The Return Home function can be used to reorient the drone towards the Home Point. By activating the Return Home function, the drone will rise to the return altitude (20m) and then turn towards the Home Point before starting its return.
- If any obstacles are in the flight path of the drone during a Return Home process, control should be regained by turning off the Return Home function.
- If you crash your drone, lock the motors to prevent damage to the motors and propellers.
- Do not attempt to touch the motors, until the motors have stopped rotating completely.
- When landing on water, avoid abrupt landings to avoid damage to the drone.
- When flying over water, avoid the drone dropping or crash into the water from a high altitude as this could cause major damage to the drone.

 ©2024 SwellPro All Rights Reserved

- Do not expose the drone & battery to direct sunlight for long periods as this can raise the internal temperature of the drone to well above the operating temperature range.
- If the drone does not appear to be responding to the remote controller, as usual, switch the drone to ATTI flight mode and fly the drone to a safe landing location.
- The possible causes for the instability or loss of control of the drone could be poor GPS signal, or poor radio signal, or weak Earth magnetic field.
- If the drone appears to be affected by magnetic interference, try the following remedies.
- Re-calibrate both the compass and accelerometer on the SwellPro Fisherman.
- After completing the calibration, arm the drone motors to fly in GPS mode to verify whether this phenomenon has been eliminated.
- If the abnormality remains the same, please re-locate to another place at least 5KM away and re-calibrate the SwellPro Fisherman. Following the re-calibration, please test the drone again.
- If the problem persists, please contact SwellPro or your local dealer for further troubleshooting and solutions.

Image Transmitter Settings

⚠ After using the drone, the image transmitter is going to be very hot, which is normal. Please be careful when setting the image transmitter.

You can set the image transmitter radio frequency and transmitted power by accessing the image transmitter inside of the Fisherman FD1. To locate the image transmitter, open the GPS cover, look for a gray rectangular component (as shown below) inside the chamber.

©2024 SwellPro All Rights Reserved

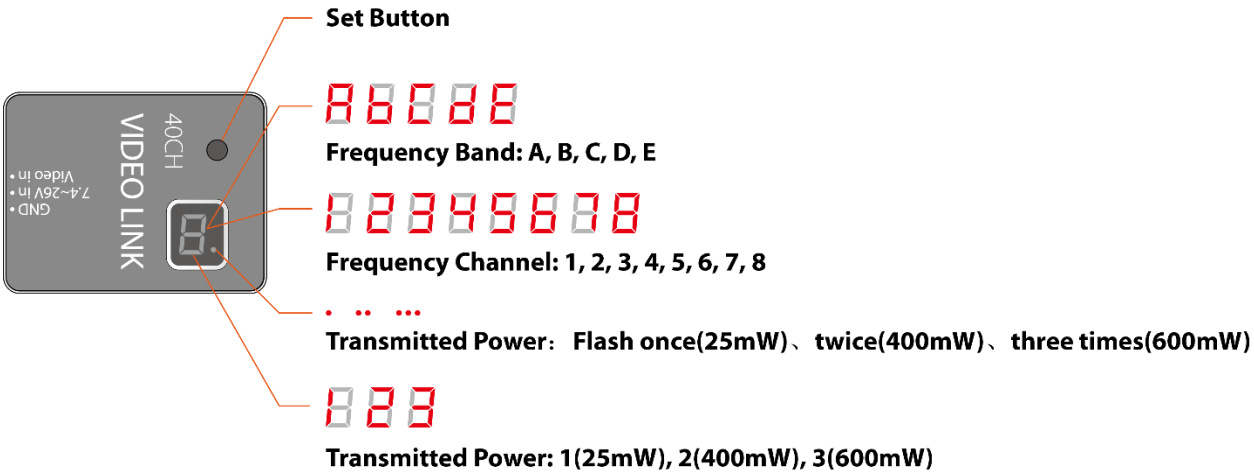

After powering on the aircraft, the display is going to show the current frequency channel. The dot on the bottom right corner indicates the current transmitted power.

Set Frequency Channel

There are 40 channels on the image transmitter. To set the channel (supposed set to E5):

1. Power on the aircraft.
2. Long press the set button for 3 seconds. The display is going to flash character “A-E”.
3. Press once to select “E” when the display shows character “E”.
4. Then it is going to show number “1”. Press 4 times to set “5”.
5. Press for 2 seconds to confirm the settings. The dot on the bottom right corner will flash once indicates it’s set.

You have successfully set the channel to E5. The display is going to flash “E” “1” alternatively.

Set Transmitted Power

To set the transmitted power:

1. Power on the aircraft.
2. Long press the set button for 5 seconds. The display is going to show the number.
3. Press to select the transmitted power.
    a. 1 - 25mW
    b. 2 – 400 mW

 ©2024 SwellPro All Rights Reserved

c. 3 – 600 mW

4. Press for 2 seconds to confirm the settings. The dot on the bottom right corner will flash once indicates it's set.

You have successfully set to the desired transmitted power. The dots will flash accordingly.

Warranty Information

Please visit the SwellPro website https://www.swellpro.com/news/after-sales-support.html

Look for the "After-sales Service Policy" and submit a service request if needed.

Maintenance and Storage

- After flying over the sea, sand, or water, the SwellPro Fisherman and modules must be thoroughly washed with freshwater within 2 hours and dried - especially the motors, gimbals, and camera.
- It is strongly advised to rinse the drone before any salt crystallizes.
- Motors are best rinsed by removing the propellers and immersing the motors one at a time into a bucket of warm fresh water and arming the drone in ATTI flight mode so the motors spin underwater.
- Avoid prolonged exposure to the sun.
- Before putting the aircraft into storage, turn off the power, disconnect the battery plug, and clean the aircraft.
- Store all the aircraft parts and accessories together.
- Storage the aircraft in a dry, ventilated, cool temperature (20°C - 28°C).
- If not planning to use a drone in the near future, be sure to discharge the battery to about 50% (flight battery voltage at 15.8V)
- If the aircraft is not in used for a long period, to maintain battery activity, complete the charge and discharge every 3 months.
- Do not over-discharge the battery for storage or store the battery for an extensive period of storage (<3 months), as over-discharge the battery resulting in permanent damage causing the battery not able to be recharged again.

©2024 SwellPro All Rights Reserved

Battery Care and Maintenance

- Do not allow the batteries to come into contact with any kind of liquid.
- Do not drop the battery into the water.
- Do not leave batteries out in the rain, or near a source of moisture. If the inside of the battery comes into contact with water, chemical decomposition may occur, potentially resulting in the battery catching on fire, and may even lead to an explosion.
- Never use or charge swollen, leaky, or damaged batteries. If your batteries are abnormal, please contact SwellPro or a SwellPro authorized dealer for further assistance.
- The battery can be used in temperatures ranging from -10°C to 40°C. The use of the battery in environments above 50°C can lead to a fire or explosion. The use of the battery below -10°C can lead to permanent damage.
- Never disassemble, or penetrate the batteries with sharp objects, otherwise, this may result in the battery catching fire, or even lead to an explosion.
- Electrolytes in the battery are highly corrosive. If any electrolytes make contact with your skin or eyes, immediately wash the affected area with fresh running water for at least 15 minutes, and then see a doctor immediately.
- If the battery falls into water, pick it up immediately and put it in a safe and open area. Maintain a safe distance from the battery until it is completely dry. Never use the battery again, and dispose of the battery properly as described in the Battery Disposal section below.
- Do not heat batteries. A battery fire can be extinguished using sand, or a dry powder fire extinguisher.
- Do not put batteries in a microwave oven, or a pressurized container.
- Do not put the loose battery cells onto any conductive surface, such as a metal table.
- Do not put any conductive cables or metal objects together with batteries, where they may short-circuit against each other.
- Do not drop or strike batteries.
- Do not place heavy objects on the batteries or the battery charger.
- Clean battery terminals with a clean, dry cloth. Failure to do so may result in poor electrical contact, which could reduce the battery capacity, or damage the charger.
- Do not continue to fly the drone after the low battery alarm has been activated; this will result in over-discharging the battery, and potentially could damage the battery cells.

Precautions for low-temperature use

1. When the battery use in a low-temperature environment (-10°C to 5°C), the battery capacity and flight time will be drastically reduced. It is recommended to take off when the battery is fully charged. Please fully charge and keep the battery warm before use.

 ©2024 SwellPro All Rights Reserved

2. In a low-temperature environment, it is recommended to preheat the battery to above 5°C before flying, and it is better to preheat to above 20°C
3. Before flying in a cold environment, insert the battery into the aircraft to warm up for 1 to 2 minutes, and take off after the battery is fully warmed up.

Battery Charging

- Always use a SwellPro approved charger to charge the battery of the drone. SwellPro takes no responsibility if the battery is charged using a non-SwellPro charger.
- To avoid any potential accidents happening, please do not leave the battery charging unattended.
- Do not charge the battery near flammable materials, or on flammable surfaces, such as carpet or wood.
- Disconnect the charger when not in use.
- Do not clean the charger with denatured alcohol or other flammable solvents.
- Never use a damaged charger.

Battery Storage and Transportation

- Keep batteries out of the reach of children and pets.
- Do not leave the battery near heat sources, such as a furnace, heater, or exposure to strong direct sunshine, for example: in cars
- The ideal storage temperature is 22°C ~ 28°C.
- Keep the battery in a dry and ventilated environment
- Never drop the battery into the water, or store it in places where there is a possibility of water leakage.
- Do not drop, strike, impale, pierce, or manually short-circuit the battery.
- Keep the battery away from metal objects, such as watches, jewelry, and hairpins.
- It is recommended to recharge the battery once every 3 months when the battery is in storage.
- If not planning to use a drone in the near future, be sure to discharge the battery to about 50% (flight battery voltage at 15.8V)

Battery Disposal

Dispose of the battery in specific recycling boxes only after a complete discharge.
DO NOT place the battery in regular trash containers. Strictly follow your local regulations regarding the disposal and recycling of batteries.

©2024 SwellPro All Rights Reserved

Disclaimer and Warning

This product is not a toy and should only be operated by persons over the age of 18. Please keep it out of reach of children and pay particular attention to the possible scenarios of children unexpectedly appearing during flight operations.

Be sure to read this document carefully before using the product, to fully understand your legal rights, responsibilities, and safety instructions. Failure to do so may cause property damage, accidents, and personal injury. Once this product is used, it is deemed that you have understood, recognized, and have accepted all the terms and conditions of this statement.

The user is responsible for all the consequences of his actions and the use of the product. The user agrees to use the product for his sole & legal purpose and agrees with the terms & conditions of this agreement, and other relevant policies & guidelines that may be specified by SwellPro.

Under the maximum permitted by law and approved circumstances, SwellPro accepts no liability for any indirect, punitive, consequential, special, or criminal damages, including the purchase cost, or loss of income due to the loss of use of the drone.

SwellPro is exempt from the user's liabilities for damage(s) to person/s or property, or injuries incurred directly or indirectly from the use of this product in the following conditions:

- Damage or injuries incurred when the user/s are under the influence of alcohol, drugs, or medication.
- Any malfunction caused by operators' failure to follow the guidance of the manual to assemble and set up or operate the drone as described and designed.
- Damage or injuries may occur due to failure to study the tutorial videos and the user manual before flying the drone.
- Damage or injuries caused to a person/s or property due to failure in correctly calibrating the drone as outlined in the manual before the flight.
- Damage or injuries incurred as a result of the use or installation of any unauthorized third-party accessories or counterfeit parts - which were not provided and approved of by SwellPro.
- Damage or injuries as a result of flying the drone out of eyesight range, or more than 300m away from the controller.
- Damage or injuries caused by flying the drone in areas of magnetic fields & radio interference.
- Damage or injuries caused by flying in a NO-FLY ZONE that is regulated by local laws & rules.

 ©2024 SwellPro All Rights Reserved

- Damage or injuries including crashes, loss of control, or water ingress caused by abusing or modifying the original drone structure,
- Damage or injuries caused by using broken & aging components.
- Damage or injuries caused by continuing to fly the drone even if the low battery alarm is activated.
- Damage or injuries caused by failure to wash the components with fresh water after flying over or near the sea & corrosive waters.
- Damage or injuries that have occurred when the drone has been subjected to the following conditions or situations: collision, fire, explosion, floods, tsunamis, ice, snow, avalanche, flooding, landslide, earthquake, etc.
- Damage or injuries incurred by intentionally dropping or crashing the FD1 into the water from a high altitude, especially water ingress into the drone fuselage and gimbal malfunction.
- Damage or injuries incurred by intentionally dropping or crashing the FD1 to the ground or water from a high altitude, especially water leakage into the drone fuselage and gimbal frame as a result of this collision.
- Damage due to not follow the maintenance manual properly.
- Damage caused by operating the product at a weight greater than the safe takeoff weight, as specified by instruction manuals.
- For any reasons, the user cannot retrieve the drone for further diagnosis and examination.
- The user is not able or unwilling to provide the flight log to SwellPro for diagnosis and examination.
- Any attempt to modify flight log data noticed by SwellPro.
- Other Damage(s) or injuries that are not SwellPro's liability.

Version Information

SwellPro products are constantly improving, so as are the product user manuals. It is recommended to visit www.swellpro.com to check and download the latest user manual.

Version

1.0 FD1 User Manual First Edition

1.1 FD1 User Manual 1.1 Edition

- Add the RC Sand-Proof Cover installation description on P13 - 14.

1.1.1 FD1 User Manual 1.1.1 Edition

- Add parts “When experiencing … full responsibility” in the ***Flight Safety and Environment*** section.

©2024 SwellPro All Rights Reserved

- Add parts “Damage due to not following … the flight log to SwellPro for diagnosis and examination.” in the ***Disclaimer and Warning*** section.

1.1.2 FD1 User Manual 1.1.2 Edition

- Add the “remote controller is not waterproof” reminder on section ***Remote Controller Diagram, Remote Controller, Flight***

1.2 FD1 User Manual 1.2 Edition

- Add the aircraft pairing button diagram under ***Controller Pairing*** section.

- Add the ***Image Transmitter Settings*** section under ***Appendix***.

1.2.1 FD1 User Manual 1.2.1 Edition

- Revise **Battery Care and Maintenance.**

1.3 FD1 User Manual 1.3 Edition

- Add **Install/Removal of GPS Cover** under Install the Aircraft section.

1.3.1 FD1 User Manual 1.3.1 Edition

- Remove *RC Sand Cover section*.

1.4.0 FD1 User Manual 1.4.0 Edition

- Add Flight Battery section.

1.4.1 FD1 User Manual 1.4.1 Edition

- Update on *Specification*.

1.4.2 FD1 User Manual 1.4.2 Edition

- Update on *Specification*

©2024 SwellPro All Rights Reserved