Fisherman FD1S

User Manual



SwellPro

Visit https://www.swellpro.com/pages/support-center for the latest version of manuals and firmware.

Fisherman FD1S

Model: FD1S

v1.0.1 – 2026.02

1.1 Thank You

Thank you for purchasing the Fisherman FD1S. We have designed and manufactured the Fisherman FD1S to the highest quality standards.

It is important to familiarize yourself with the features of this unique aircraft by carefully studying this manual and particularly the priority sections indicated in the Table of Contents. **After operating in saltwater or polluted water, the aircraft must be rinsed thoroughly with fresh water immediately, prior to the drying of salt and sediment on its components.**

Visit www.swellpro.com/pages/support-center for the latest manuals, software, and tips. Refer to the Version Information section at the end of this manual, which details additions and corrections.

1.2 Copyright

Swellpro Co., Ltd, copyrights this manual with all rights reserved. Without prior written authorization from the company, no person (or entity) may copy, scan, store, distribute, reproduce,sell, transfer, or modify any part or all of this manual in any form for personal use or use by others.Users should refer only to this manual and its contents for instructions on operating this product. This manual should not be used for any purpose other than its intended use.

1.3 Suggestions for use

SwellPro provides users with tutorial videos and the following documents:

1. Quick Start Guide
2. User Manual

This document is designed to be printed or viewed on a computer or mobile device. If used electronically, you can search directly for terms like "Battery" to find references. Additionally, you can click on any topic in the Table of Contents to navigate directly to that topic.
Watching tutorial video and reading the Quick Start Guide before using it for the first time is recommended. Refer to the User manual for more information.

Legend

⚠️ Important 💡 Hints And Tips 📖 Reference

1.4 Disclaimer and Warning

To ensure the safe and successful operation of this product, please read and fully understand all user documents listed above, and strictly follow the operating instructions and steps described in this manual. Store the aircraft and its accessories out of the reach of children and pets. If you do not abide by the Safety Operation Guidelines, Swellpro shall not be responsible for any product damage or personal or property loss during use, and shall not provide any warranty service. Never modify the product with any incompatible components or in any way that does not conform to Swellpro's official instructions. Please make sure that the operations you perform do not endanger the personal or property safety of yourself or those around you. By using this product, you agree that you have read and accepted all terms related to it. You undertake to be responsible for your own actions and all consequences arising therefrom. You undertake to use this product only for legitimate purposes and agree to these terms and any relevant policies or guidelines that Swellpro may establish.

SwellPro is exempt from the user's liabilities for damage(s) to person/s or property, or injuries incurred directly or indirectly from the use of this product in the following conditions:

- Damage or injuries incurred when the user/s are under the influence of alcohol, drugs, or medication.
- Any malfunction caused by operators' failure to follow the guidance of the manual to assemble and set up or operate the aircraft as described and designed.
- Damage or injuries may occur due to failure to study the tutorial videos and the user manual before flying the aircraft.
- Damage or injuries incurred as a result of the use or installation of any unauthorized third-party accessories or counterfeit parts, which were not provided or approved by SwellPro.
- Damage or injuries as a result of flying the aircraft out of eyesight range, or more than 300m away from the controller.
- Damage or injuries caused by flying the aircraft in areas of magnetic fields & radio interference.
- Damage or injuries caused by flying in a NO-FLY ZONE that is regulated by local laws & rules.
- Damage or injuries, including crashes, loss of control, or water ingress, caused by abusing or modifying the original aircraft structure,
- Damage or injuries caused by using broken & aging components.

Copyright ©2025 SwellPro All Rights Reserved

- Damage or injuries caused by continuing to fly the aircraft even if the low battery alarm is activated.
- Damage or injuries caused by failure to wash the components with fresh water after flying over or near the sea & corrosive waters.
- Damage or injuries that have occurred when the aircraft has been subjected to the following conditions or situations: collision, fire, explosion, floods, tsunamis, ice, snow, avalanche, flooding, landslide, earthquake, etc.
- Damage or injuries incurred by intentionally dropping or crashing the Splash Aircraft into the water from a high altitude, especially water ingress into the aircraft fuselage and gimbal malfunction.
- Damage due to not following the user manual and maintenance manual properly.
- Damage caused by operating the product at a weight greater than the safe takeoff weight, as specified by instruction manuals.
- Damage caused by attaching payloads during flight or hover, in violation of the user manual's guidelines.
- For any reason, the user cannot retrieve the aircraft for further diagnosis and examination.
- The user is not able or unwilling to provide the flight log to Swellpro for diagnosis and examination.
- Any attempt to modify flight log data noticed by SwellPro.
- not charging it for a long time will cause the battery to over-discharge and cause permanent damage.
- Damage caused by not charging the battery for a long time due to not following the user manual and maintenance manual properly.
- Other Damage(s) or injuries that are not SwellPro's liability.

1.5 End Use Statement

This product may be subject to export control laws in China, U.S, EU or other countries, which can only be authorized for civil(not military)use in sale, export or domestic transfer. Users need to confirm the product will not be used in the following situations; otherwise he or she will assume all losses caused by usage in such situations and legal responsibility on their own:

1. any military end use;
2. used for nuclear weapons, biological or chemical weapons or missiles that carry those weapons;
3. export or re-export or transfer it to any entity or person sanctioned by China, U.S, EU or any other government with jurisdiction;
4. export, re-export or transfer it to Cuba, Iran, North Korea, Syria, Crimea, Sevastopol and

Copyright ©2025 SwellPro All Rights Reserved

other areas under embargo;

5. any device or equipment that supports monitoring purpose.

1.6 Social Media

Join our Facebook page to meet other people who share their adventures with SwellPro.
www.facebook.com/SwellPro/

Enterprise

Fishing

SwellPro Fishing Drone Owner Group

https://www.facebook.com/groups/splashdrone4

SwellPro Enterprise Drone Owner Group

https://www.facebook.com/groups/1263815084895535

1.7 Warranty Information

For the after-sales policy of the product,please visit:

https://www.swellpro.com/pages/support-center

1.8 Tutorial video

Please Scan the QR code to view the FD1S first flight tutorial video.

Copyright ©2025 SwellPro All Rights Reserved

2 Content

1.1 Thank You 1
1.2 Copyright 1
1.3 Suggestions for use 1
1.4 Disclaimer and Warning 2
1.5 End Use Statement 3
1.6 Social Media 4
1.7 Warranty Information 4
1.8 Tutorial video 4
2 Content 5
3 Flight Safety 1
3.1 Flight Operation Regulations 1
3.2 Flight Safety and Environment 2
3.3 Flight Restrictions 3
3.4 Wireless Communication Requirements 3
3.5 Aircraft Calibration 4
3.5.1 Compass Calibration 4
3.6 Return to Home 5
3.6.1 Return Home Process 5
3.6.2 Low Battery RTH 6
3.6.3 Low Battery Landing 6
3.6.4 Failsafe RTH 7
3.7 Standard flight operation 7
3.7.1 Pre-Flight Checklist 7
3.7.2 Basic Flight Steps 8
4 Aircraft 9
4.1 Aircraft Diagram 9
4.2 Aircraft Status Lights 10
4.3 Flight Modes 11
4.4 Flight Battery 12
4.4.1 Intelligent Flight Battery Specifications 12
4.4.2 Charging 12
4.4.3 Install/Remove Flight Battery 14
4.4.4 Powering the Battery On/Off 15
4.4.5 Battery Capacity 16
4.5 Power on/off 16
Aircraft Power On/Off 16
4.6 Install Propeller 17
4.7 Barometric Membrane 18
5 Remote Controller 19
5.1 Diagram 19
5.2 Power On/Off 19
5.3 Remote Controller Screen 20
5.4 Basic Flight 21
5.4.1 Starting and Stopping the Motors (Arming) 21
5.4.2 Control the Aircraft 21
5.4.3 Takeoff and Landing 22
5.5 Advanced Flight 22
5.5.1 PowerFlip 22
5.5.2 Water Takeoff and Landing 23
5.5.3 Boat Takeoff and Landing 23
5.6 Pairing 24
6 Payload Release 25

Copyright ©2025 SwellPro All Rights Reserved

7 Appendix 26

7.1 Specification 26

7.2 Battery Care and Maintenance 28

7.2.1 Battery Charging 29

7.2.2 Precautions for low-temperature use 29

7.2.3 Battery Storage and Transportation 30

7.2.4 Battery Disposal 30

7.3 Inspection 30

7.3.1 Fuselage 30

7.3.2 Battery 31

7.3.3 Motor 31

7.3.4 Propeller 31

7.4 Maintenance And Store 32

7.4.1 Daily Maintenance 32

7.4.2 Store and Transport 32

7.5 FCC Caution 33

7.6 Version Information 33

 Copyright ©2026 SwellPro All Rights Reserved

3 Flight Safety

After the first unboxing, please scan the QR code to obtain the latest version of the manual. Please read and understand the entire manual carefully to ensure the safe and correct use of the aircraft.

Before engaging in actual outdoor flights, it is essential to undergo relevant basic flight training (such as watching instructional videos and receiving guidance from professionals) to familiarize oneself with the aircraft's functions and characteristics and the remote controller's features. Before your flight, please familiarize yourself with all local laws and regulations regarding civilian unmanned aerial vehicles. Choose an appropriate flight environment, set a reasonable flight altitude, and conduct legal flights in accordance with relevant flight requirements and restrictions. Using the aircraft in unsuitable flight environments may pose legal risks. Before flight, be sure to read the "**Disclaimer and Warning**"to understand relevant safety precautions.

3.1 Flight Operation Regulations

Before flying, it is crucial to understand and adhere to the following flight operation regulations.

- Operating the aircraft while under the influence of alcohol, drugs, medication-induced impairment, dizziness, fatigue, nausea, or any other compromised physical or mental condition is strictly prohibited.
- Avoid flying near manned aircraft and ensure that the aircraft's flight does not impact larger manned aircraft on their flight paths. Remain vigilant, steer clear of other aircraft, and land immediately if necessary.
- Do not fly in areas prohibited by local regulations without obtaining authorized permits.
- Prohibited areas may include airports, borderlines, major cities and densely populated areas, large event venues, emergencies (such as forest fires), and sensitive building facilities zones (such as nuclear power plants, power stations, hydroelectric plants, prisons, traffic arteries, government buildings, and military facilities).
- Prohibit the use of the aircraft at large event venues, including but not limited to sports stadiums and concerts.
- Avoid flying in airspace exceeding the regulated altitude.
- Do not use the aircraft to carry any illegal hazardous materials.

Copyright ©2026 SwellPro All Rights Reserved

- Ensure a clear understanding of the type of flight activity (e.g., recreational, official, or business). Obtain permits from relevant authorities before flying. If necessary, consult with local legal professionals for detailed definitions and explanations of flight activity types.
- When using the aircraft for filming, respect the privacy of others. It is strictly forbidden to use this product for any unauthorized surveillance activities, including but not limited to monitoring individuals, groups, events, performances, exhibitions, or buildings.
- Please note that recording or photographing others, groups, events, performances, exhibitions, etc, without legal authorization may violate copyright, privacy rights, or other lawful rights of others. Therefore, it is essential to thoroughly understand and comply with local laws and regulations before use.

3.2 Flight Safety and Environment

- Avoid flying in adverse weather conditions such as strong winds, snow, rain, heavy fog, sandstorms, extreme cold, or high temperatures. The maximum wind speed resistance is 12 m/s.
- Ensure the aircraft takes off from and lands on open, unobstructed, and flat ground. Keep a safe distance from crowds, surrounding buildings, trees, etc., and control the aircraft within visible range to ensure flight safety.
- Fly at altitudes below 3000m.
- Due to poor lighting conditions, GNSS signal loss, narrow spaces, etc., some aircraft functions may be restricted. Always be aware of the surrounding environment and maintain safe control of the aircraft. For night flights, please choose open, uninhabited areas and ensure the landing lights are on for safety.
- Avoid taking off or landing on moving platforms, such as moving vehicles, boats, etc.
- Avoid taking off or landing on sandy surfaces to prevent raised dust from affecting the lifespan of the motors.
- The performance of the smart battery is influenced by environmental temperature and air density. Use the aircraft in environments ranging from-10 °C to +40 °C.
- When using the aircraft in disaster-stricken areas after events such as fires, explosions, lightning, storms, tornadoes, heavy rain, floods, earthquakes, sandstorms, etc., pay special attention to the safety of takeoff and landing points and changes in the surrounding environment. Prioritize personal safety.
- Stay away from steel structures, iron mines, etc.,to avoid interference with the aircraft's compass.

Copyright ©2026 SwellPro All Rights Reserved

- Before flying in low temperatures, warm the battery to 25℃ to maximize flight time.
- Although the Fisherman FD1S is waterproof, do not fly in fog or strong wind conditions. (For wind speed exceeding 14 m/s)

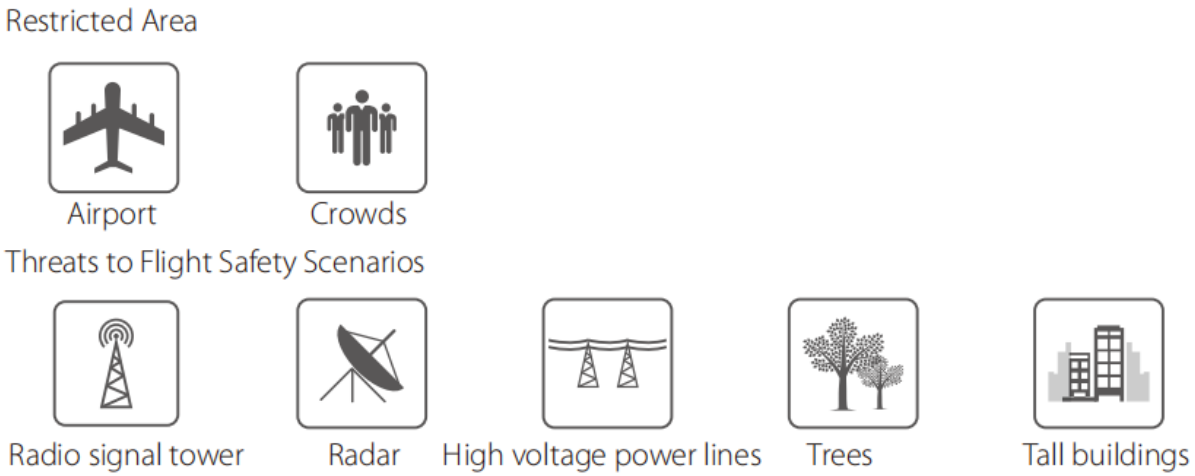

3.3 Flight Restrictions

According to provisions of the International Civil Aviation Organization and many national air traffic regulations, aircraft must be operated in specified airspaces. By default, the Fisherman FD1S is configured not to exceed an altitude of 120m from the Home Point altitude.

3.4 Wireless Communication Requirements

- Stay away from areas with strong electromagnetic interference, such as radar stations, microwave stations, mobile communication base stations, drone interference devices, etc., and maintain a distance of at least 200 meters.
- Exercise caution when flying near electromagnetic interference sources and continuously monitor and assess the stability of the remote controller's video transmission signal and image. Common sources of electromagnetic interference include, but are not limited to, high-voltage transmission lines, high-voltage substations, mobile communication base stations, and TV broadcast signal towers. If significant interference occurs in these areas during flight operations, the aircraft may not be able to fly normally, so return and landing should be done promptly.
- Choose open, spacious areas or high ground for flying. Tall mountains, rocks, urban structures, and forests may obstruct the GNSS signal and the aircraft's video transmission signal.

Copyright ©2026 SwellPro All Rights Reserved

- It is recommended to turn off unnecessary Wi-Fi and Bluetooth devices in the vicinity to avoid interference with the remote controller signal.

3.5 Aircraft Calibration

3.5.1 Compass Calibration

The compass (magnetometer) has been calibrated when the aircraft leaves the factory, and users usually do not need to recalibrate it.

Compass calibration is necessary for any of the following situations:

- The drone has just been repaired.
- The drone has been subjected to strong magnetic fields.
- The drone has been crashed or subjected to heavy shaking.
- The drone sways or drifts excessively during hovering in Normal mode.
- The drone is farther than 500 km distance away from the last calibration location.
- The drone is not able to fly straight.
- The drone's flight direction does not align with the input commands from the remote controller.
- The remote controller screen prompts 【Compass disturbed, move aircraft or calibrate compass】.

Please calibrate it according to the following steps. The Compass Calibration interface will automatically close upon successful completion.

	Operation	Prompt	Indication
1	After turning on the drone and the remote controller, both joysticks are pushed to the extreme upper-left position and held for 5 seconds. Until the front headlight is RED FLASHING SLOWLY, and the rear light is SOLID GREEN, indicating entry into calibration mode.	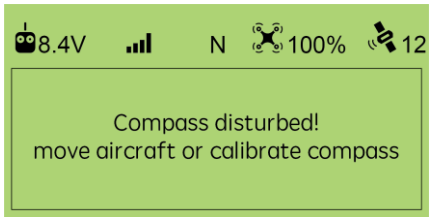	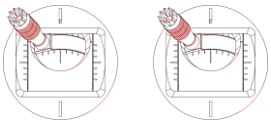

 Copyright ©2026 SwellPro All Rights Reserved

	Operation	Prompt	Indication
2	Hold the drone to keep it horizontal. Rotate 360° horizontally until the page prompts you to proceed to the next step.	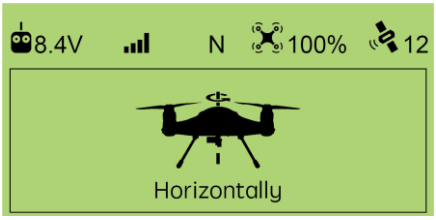	
3	Hold the drone to keep it nose-down vertically. Rotate it 360 ° counterclockwise horizontally until the page prompts you to proceed to the next step.	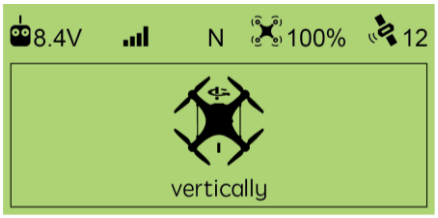	
4	Grasp the drone, making its nose point to the left and its side face down. Rotate it 360° counterclockwise horizontally until the page prompt disappears.	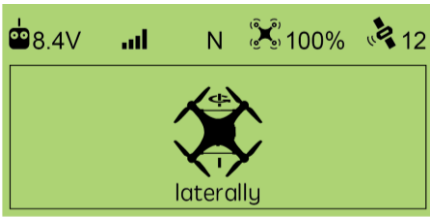	

3.6 Return to Home

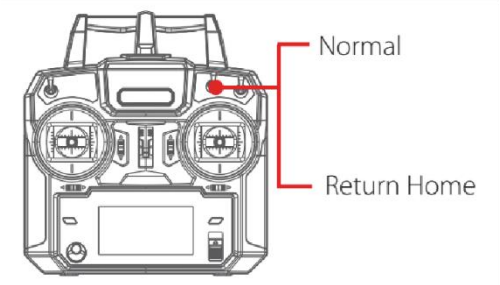

Switch the Return to Home toggle down to “Return Home”. The remote controller would prompt “Return to Home” and show signal **R**. The aircraft would begin returning to the take-off location.

Switch the Return to Home toggle up to “Normal” to exit Return to Home.

3.6.1 Return Home Process

Copyright ©2026 SwellPro All Rights Reserved

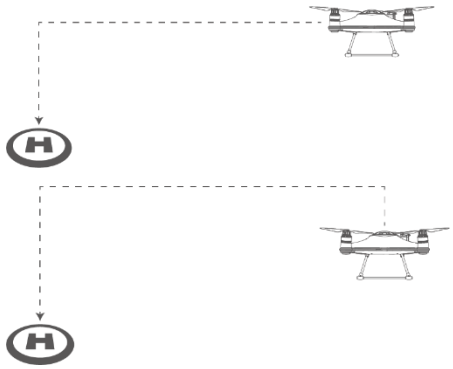

If the aircraft's height is higher than RTH Height (default 20 m), the aircraft will maintain its height and return to its home point.

If the aircraft's height is lower than RTH Height (default 20 m), the aircraft will ascend to RTH Height and then return to the home point.

- RTH Height can NOT BE CHANGED. If the aircraft is within 5 meters of the return point, triggering the return will result in a direct landing.
- If the aircraft's GPS signal is too weak (GPS icon shows less than 6 satellites), the aircraft will be unable to Return-to-Home.
- • During the RTH process, continuously monitor the aircraft's position and be aware of any obstacles along the return path.
- • During RTH, slight stick inputs can be used to adjust the flight path and avoid obstacles. The RTH mission will resume once the sticks are released. Stick inputs must be avoided when the aircraft is close to the ground to prevent propeller ground contact and potential aircraft damage.
- If the battery level drops below 10%, continued flight poses a significant risk of permanent battery damage and/or aircraft failure.

3.6.2 Low Battery RTH

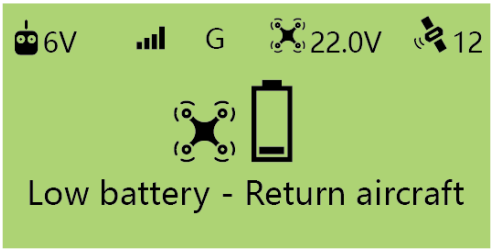

Level 1 Low Battery Warning : When the flight battery reaches the first-level low voltage warning **(22%)**, the Low Battery Return-to-Home feature is automatically triggered. The remote controller screen will display the message ” **Low battery - Return aircraft** ” and the aircraft will initiate Low Battery RTH. This function is enabled by default. Moving the control sticks during the Low Battery RTH process will cancel the function.

3.6.3 Low Battery Landing

 Copyright ©2026 SwellPro All Rights Reserved

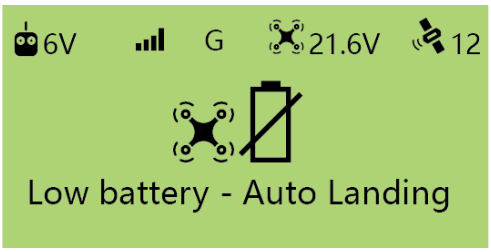

Level 2 Low Battery Warning: When the aircraft's battery reaches 10% (Level 2 Low Battery), it will automatically land at its current position. The remote controller screen will display the message "**Low Battery - Auto Landing**". The aircraft will commence landing after a 10-second countdown to prevent damage to the aircraft and battery.

⚠ During auto landing, you can regain control of the aircraft by controlling the control sticks to avoid obstacles while landing. However, flying the aircraft below **10%** is highly dangerous since the battery will not be able to maintain the flight and would cause damage to the battery and the aircraft.\

3.6.4 Failsafe RTH

Failsafe RTH automatically activates when there is a **signal loss over 4 seconds** between the remote controller and the aircraft. The aircraft would initiate RTH when activated. During the Failsafe RTH process, if the remote controller reconnects to the aircraft, the aircraft will still return home. If you want to stop the RTH process, switch the Return to Home toggle down and up again to exit RTH.

3.7 Standard flight operation

3.7.1 Pre-Flight Checklist

- Ensure the intelligent flight battery, remote controller, and mobile device are sufficiently charged.
- Inspect all propellers to confirm they are in good condition and installed correctly.
- Manually rotate all four motors to verify they spin smoothly without obstruction.
- Confirm the waterproof breathable membrane is intact and the payload release mechanism is securely installed.
- Ensure the antenna fixation nuts are tightened and the antennas are correctly oriented.
- Verify that all connector interfaces are equipped with sealing rings, and that the sealed ports are free from dirt, sand, and other debris, and are properly sealed.
- Ensure all installed interfaces are securely and properly sealed onto the aircraft.
- Check the following pre-flight data: Aircraft battery level >70%; Remote controller battery voltage >5V; GPS satellites >10.

Copyright ©2026 SwellPro All Rights Reserved

3.7.2 Basic Flight Steps

1. Complete the Pre-Flight Checklist.
2. Install the propellers.
3. Install the flight battery.
4. Place the aircraft on level, open ground or a water surface.
5. Power on the remote controller first, then power on the aircraft.
6. For your safety, always stand upwind of the aircraft and maintain a distance of at least 3 meters.
7. Novice operators should take off in Normal mode.
8. Refer to the "Takeoff" section to start the motors and take off.
9. Refer to the "Aircraft Control" section for flight operation instructions.
10. Refer to the "Landing" section to safely land the aircraft, then lock the motors.
11. **Warning: Do not approach or touch the aircraft until the propellers have come to a complete stop and the motors are confirmed locked.**
12. After operating in saltwater or polluted water, the aircraft must be rinsed thoroughly with fresh water immediately, especially the gaps of motors, gimbals, and the camera. prior to the drying of salt and sediment on its components.

Copyright ©2026 SwellPro All Rights Reserved

4 Aircraft

4.1 Aircraft Diagram

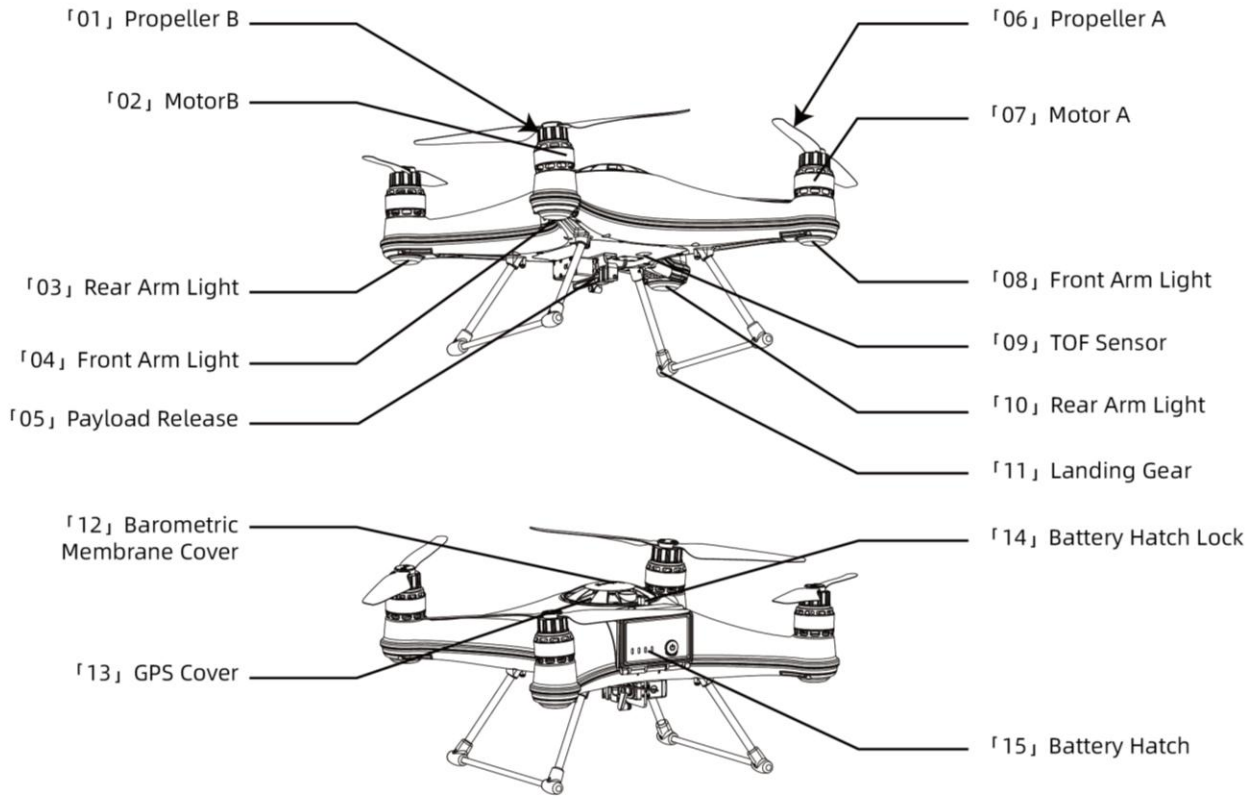

Copyright ©2026 SwellPro All Rights Reserved

4.2 Aircraft Status Lights

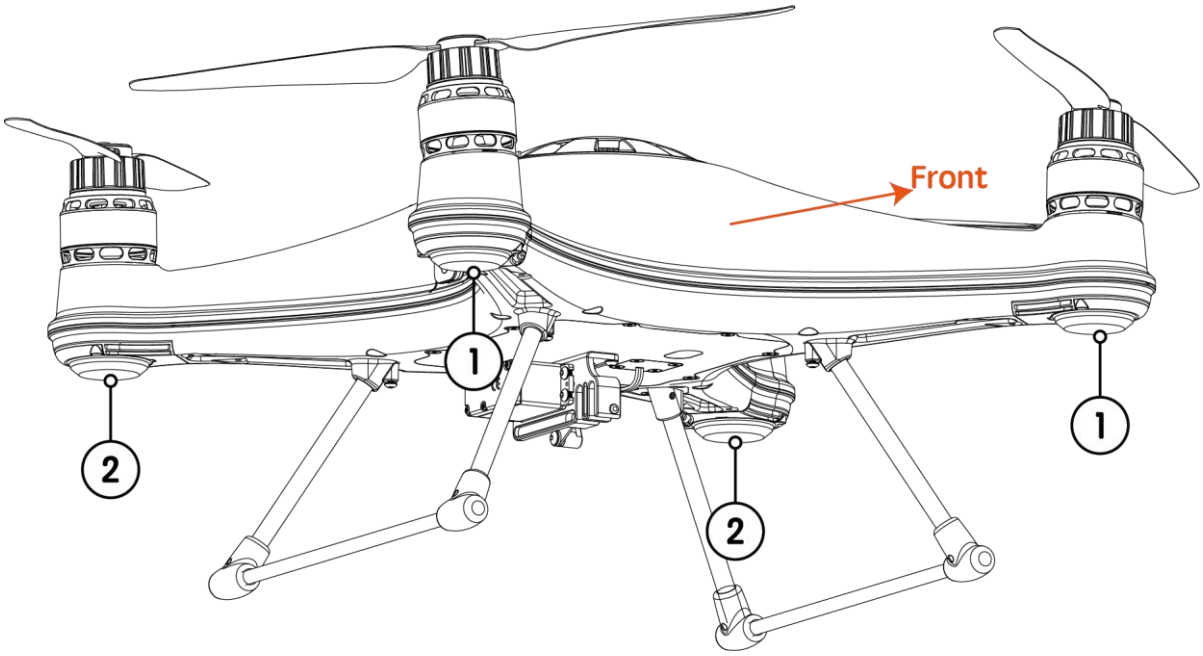

1.Front Arm LED Pattern	2.Rear Arm LED Pattern	Front	Rear	Status
		Red solid		Aircraft Nose Direction Indication
		Alternating flashing of red in front and green in back		Power-on Self-check
		Red solid	Green solid	Ready to Take Off
		Red solid	Green fast flash	Remote Controller Signal Lost
		Red fast flash		Low Battery Alarm
		Red fast flash	Green slow flash	Critical Low Battery Alarm
		Red fast flash	Green fast flash	Major Error
		Red fast flash	Green solid	No GPS Positioning
		Red slow flash	Green solid	Entering Calibration Mode

Copyright ©2026 SwellPro All Rights Reserved

4.3 Flight Modes

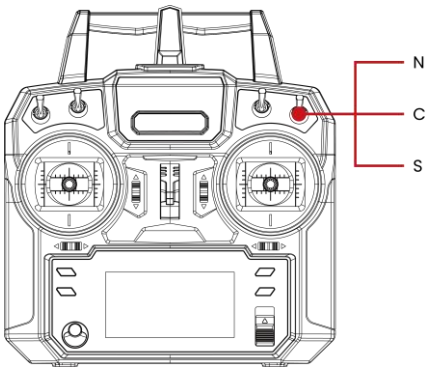

Switch the flight mode toggle to switch the flight mode of the aircraft.

Flight Modes	Description
N-Normal	In **Normal** mode, the aircraft maintains a fixed position and height while hovering.
C-Cruise	In Cruise mode, the aircraft will maintain its current heading and speed to continue flying forward. Speed: Push the stick in the opposite direction to slow down or reverse. Release the stick to lock the new speed.The maximum cruise speed is limited to 10 m/s. Altitude: Use the throttle stick to ascend/descend. Release the stick to hold the current altitude. Heading: Use the yaw stick to turn the aircraft. The cruise direction will change accordingly. Exit : switch the flight mode to Normal mode.
S-Sport	In this mode, the maximum horizontal flight speed reaches 18m/s, improving work efficiency. 💡This feature allows the aircraft to quickly fly back to its takeoff point without a payload after completing a delivery.

⚠
- When the GPS signal is disrupted, the aircraft will automatically switch to Mode A for manual control. It will revert to Normal mode once the GPS signal is restored.

Copyright ©2026 SwellPro All Rights Reserved

4.4 Flight Battery

Please charge the battery immediately upon receiving the product to prevent the battery from being too low during transportation or from overdischarging due to long-term storage.

4.4.1 Intelligent Flight Battery Specifications

- High Capacity: The high-capacity battery enables up to 29 minutes of no-load flight time for the FD1S.
- Intelligent BMS: Features a built-in advanced Battery Management System (BMS) that acts as the battery's "intelligent brain," providing comprehensive protection by monitoring voltage, current, and temperature in real-time.
- Clear Power Display: Four LED indicators provide precise 8-level power reading. Briefly press the power button to check the remaining capacity at a glance.
- One-Button Power Control: Supports safe power-on and power-off via the button, controlling power output for safer storage and transportation.
- Self-Discharge Management: If the battery remains at a high charge level for an extended period, it automatically initiates a protective self-discharge process to prevent swelling and lifespan degradation caused by prolonged full-charge storage.
- Data Communication & Logging: Supports UART communication for reading extensive data, including voltage, remaining capacity, temperature, and current. It also records fault logs and operational data for maintenance and diagnostics.

4.4.2 Charging

It is recommended to charge the battery immediately upon receipt of the product to prevent potential over-discharge due to low power levels after transit or prolonged storage.

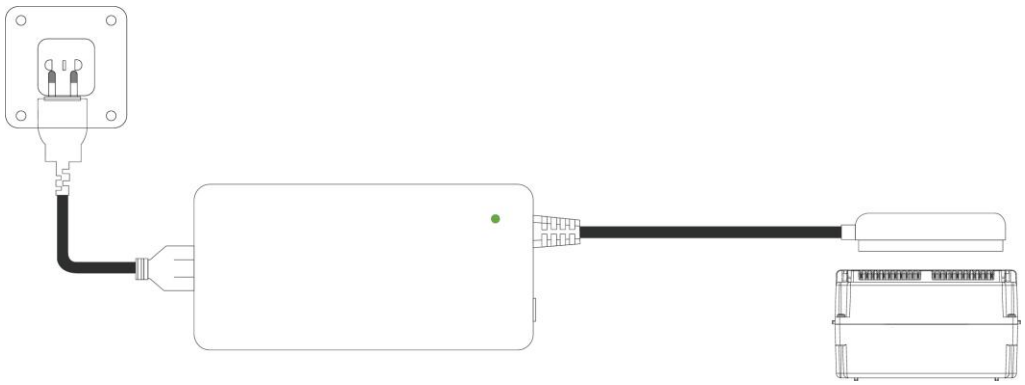

 Copyright ©2026 SwellPro All Rights Reserved

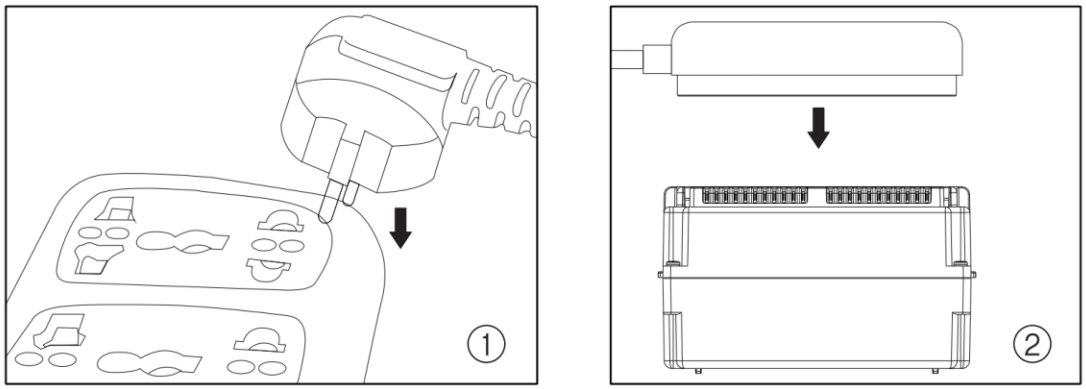

1. Refer to the diagram above to connect the intelligent flight battery to the charger, initiating the charging process. Once charging is complete (battery level approximately 100%), the charger will stop automatically. The indicator will show a solid green light. Disconnect the battery promptly.
2. The FD1S remote controller is powered by four 1.5V AA batteries and does not require charging.

- Do not allow the battery compartment to come into contact with water. Store the battery in a dry and cool environment.



- Long-term storage relative humidity: 65±20%
- Do not continue flight operations if the battery voltage is below 10%.
- The intelligent battery features a storage mode to self-discharge to an optimal storage voltage. However, for long-term storage, a complete charge-discharge cycle must be performed at least once every 3 months to maintain battery health.

Copyright ©2026 SwellPro All Rights Reserved

4.4.3 Install/Remove Flight Battery

The flight battery features a quick-install and quick-release design for easy operation.

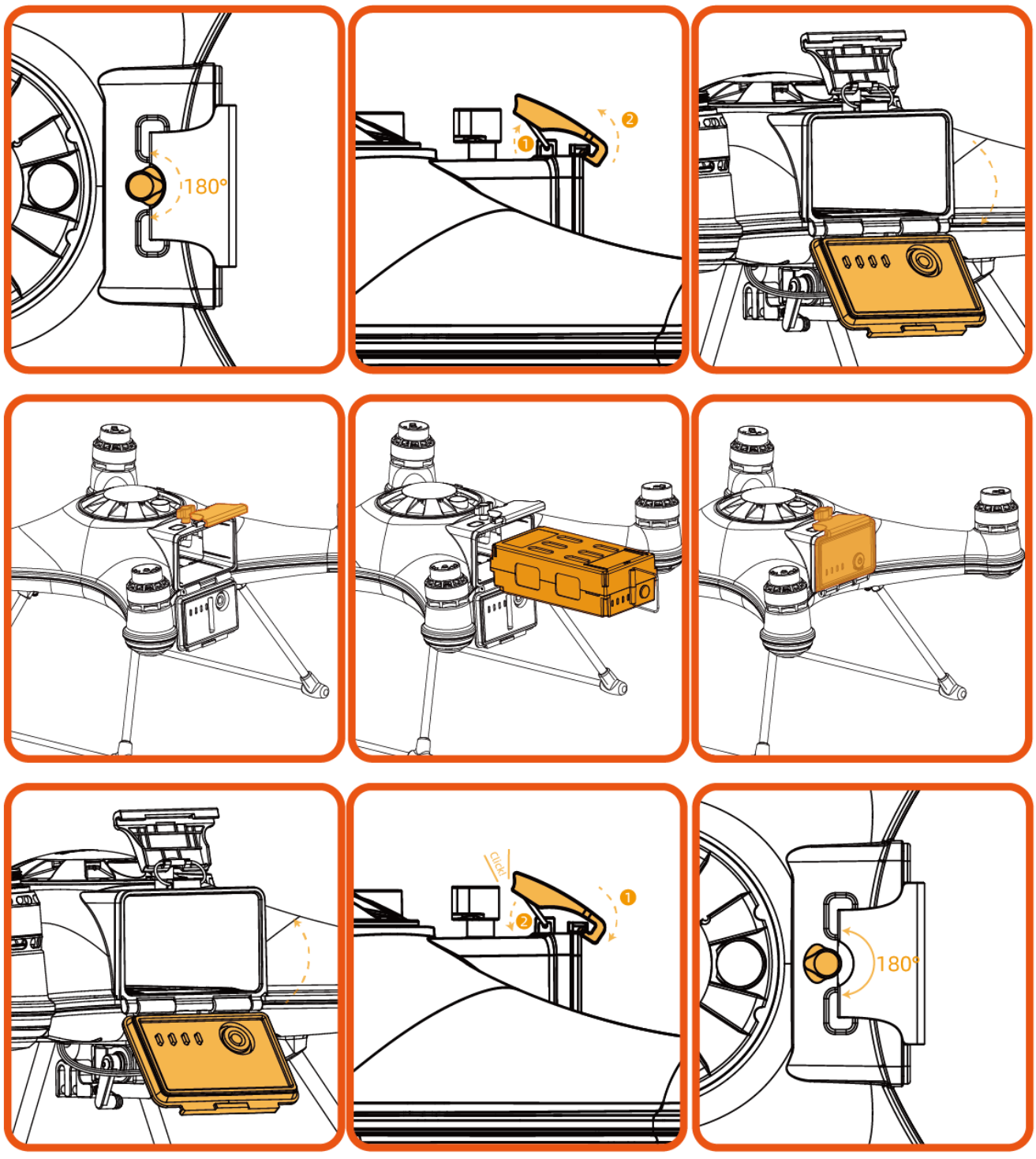

Copyright ©2026 SwellPro All Rights Reserved

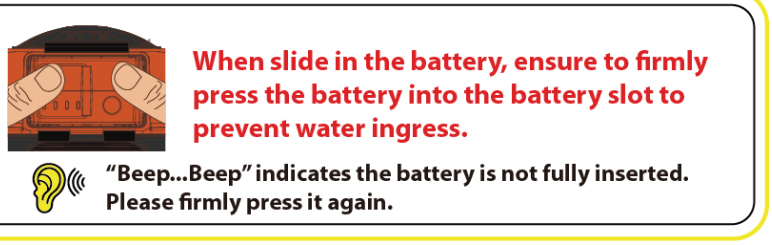

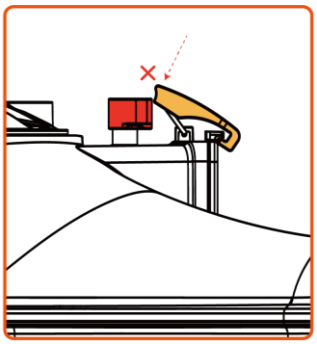

- When sliding in the battery, please ensure to firmly press the battery into the battery slot to prevent the problem of poor battery contact when the aircraft is flying.
- Always check to ensure that the waterproof seal on the hatch door is clean and lightly lubricated.
- The drone is no longer waterproof when the battery hatch is open. Do not allow water or sand to enter the drone while the battery hatch is open.'
- The Appendix of this manual contains additional warnings and precautions regarding the batteries, safety, charging, and maintenance. Please familiarize yourself with all the information.

4.4.4 Powering the Battery On/Off

Operation method: Press the Power Button once, then press and hold it for 3 seconds to power the Intelligent Flight Battery on or off.

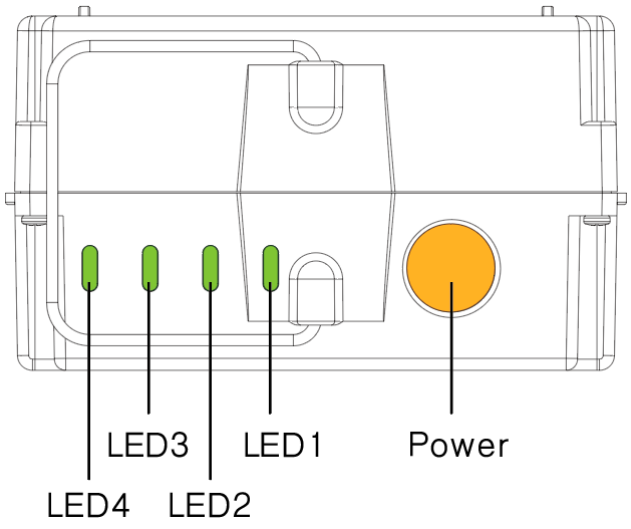

Copyright ©2026 SwellPro All Rights Reserved

4.4.5 Battery Capacity

LED1	LED2	LED3	LED4	battery level
				88 -100%
				76 - 87%
				63 - 75%
				51 - 62%
				38 - 50%
				25 - 45%
				13 - 25%
				0 -12%

keep on flicker

⚠ The LED indicators on the Intelligent Flight Battery provide a quick and accurate readout of the battery level and charging status. When the battery is off, briefly press the Power Button to display the current battery level.

Battery Anomaly Indications

LED1	LED2	LED3	LED4	Alarm Type
				Battery undervoltage alarm
				Battery overcurrent alarm
				Battery high-temperature alarm
				Battery low-temperature alarm

blinks

4.5 Power on/off

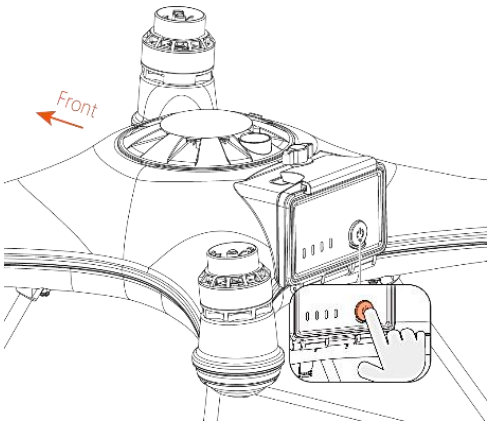

Aircraft Power On/Off

Power on/Power off: Shortly press the power button once then long press the power button for two seconds. Same for powering off the battery.

Copyright ©2026 SwellPro All Rights Reserved

4.6 Install Propeller

There are two pairs of propellers **A/B**. There are orange dots on propeller A and same dots on Motor A. Motor and propeller can be identified by letters, please follow A-A/B-B corresponding relationship to install the propeller.

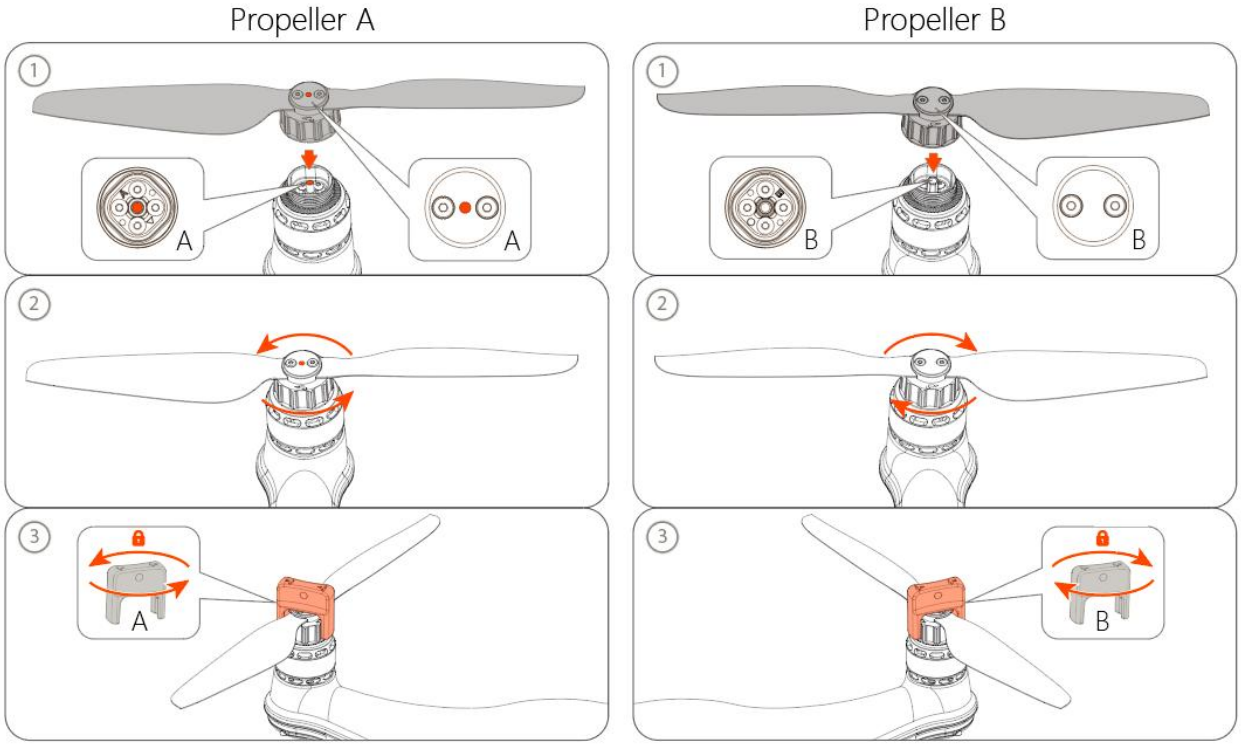

1. Place propeller A on motor A/Place propeller B on motor B.
2. Hold the motor firmly with one hand and rotate the propeller nut with the other hand.
3. Lock the propeller nut with the in-the-box tool shown above(as figure ③) (When disassembling, please use the tool to loosen the nut first).

- Ensure the aircraft power is switched off before replacing any propellers.
- When installing or removing a propeller, always support the motor by placing one hand beneath it. Failure to support the motor arm may damage the landing gear during propeller installation.
- Exercise caution when handling propellers, as their edges are sharp and may cause injury.
- Strictly prohibit flight with damaged propellers. If any damage is found, replace the propeller with a new one before flight.
- After installation, ensure there is no wobble in the propeller. If the propeller remains loose after correct installation, tighten the screw on the propeller

Copyright ©2026 SwellPro All Rights Reserved

base to secure it.

- Before each flight, inspect the propellers to ensure they are intact, correctly installed, and secure. Manually rotate each propeller to check for smooth motor rotation and to detect any grit or salt particles inside the motor. If contaminants are present, they must be thoroughly cleaned before starting the motors.

4.7 Barometric Membrane

The Waterproof Breathable Membrane is a SwellPro patented technology that allows air passage for barometer functionality while preventing water ingress into the compartment. This membrane is a precision component critical for both flight performance and water resistance, and requires careful handling.

- **Pre-flight Inspection:** Before each flight, carefully inspect the Membrane for any damage. If damage or significant wear is found, replace the membrane .
- **Post-flight Cleaning (Water Landings):** After each flight involving water contact, rinse the membrane thoroughly with fresh water.
- **Saltwater Operation:** If the aircraft is frequently operated in saltwater environments, replace the membrane every 3 months to prevent clogging from salt crystals.
- **Troubleshooting:** If unstable altitude readings or hovering are observed during flight, inspect the membrane for potential clogging.
- **Handling Warning:** Do not wipe the membrane with fingers or any objects, as this can damage its surface coating, leading to membrane failure and potential barometer water ingress.

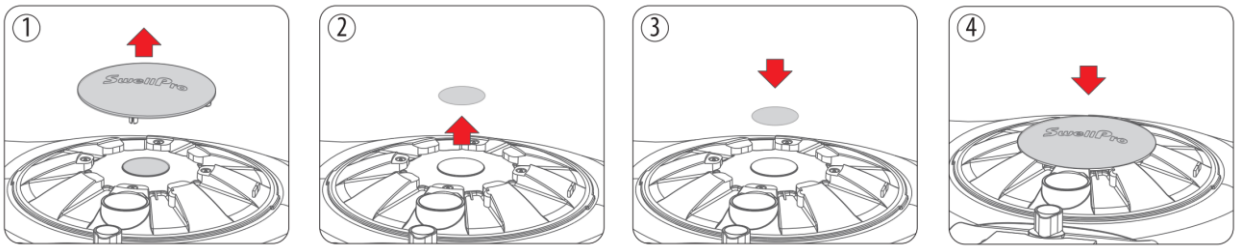

1. Take out the top cover.Remove the old waterproof and breathable membrane and clean all residues on the surface.
2. Paste the new breathable membrane.
3. Make sure there is a tight seal around the waterproof barometric membrane when applying.
4. Put the top cover back.

Copyright ©2026 SwellPro All Rights Reserved

5 Remote Controller

⚠ **The FD1S remote controller is not fully waterproof. Please do not let the remote controller meet water when using it.**

5.1 Diagram

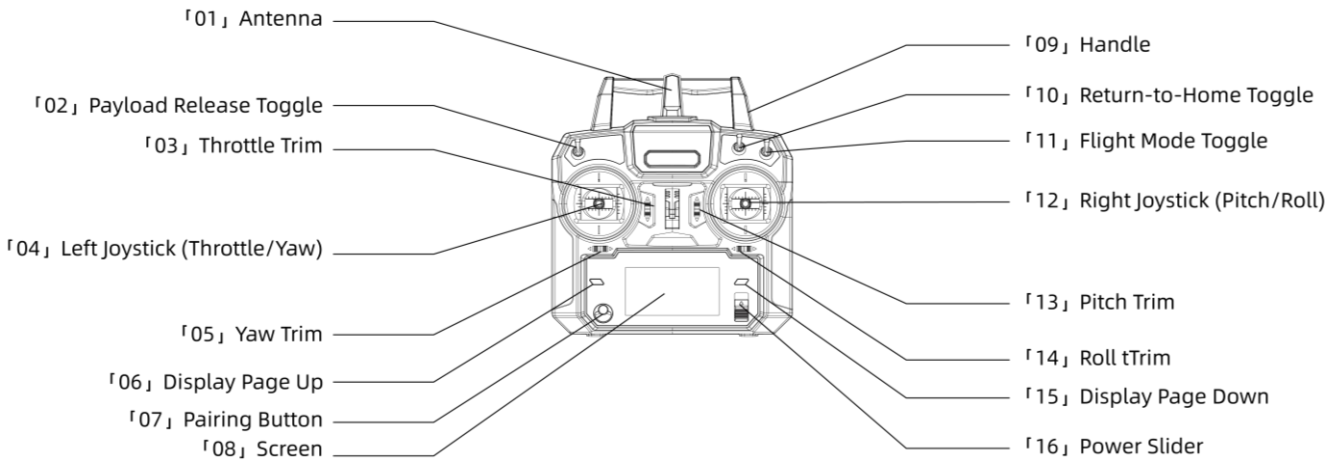

5.2 Power On/Off

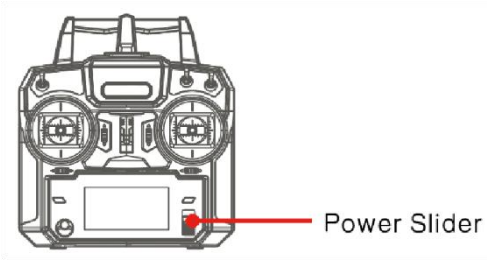

Power On: Slide up

Power Off: Slide down

⚠ **Power on the remote controller, followed by the aircraft. Power off the aircraft first, then the controller.**

Copyright ©2026 SwellPro All Rights Reserved

5.3 Remote Controller Screen

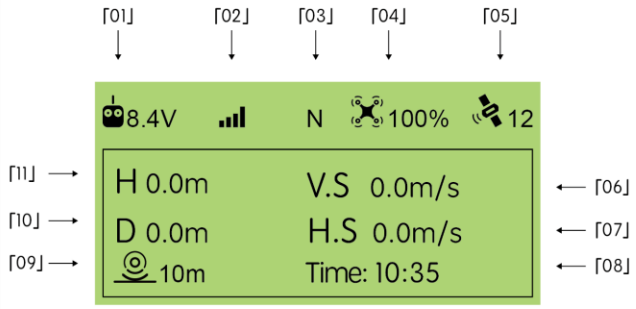

[01] Remote Controller Battery Voltage
[02] Remote Controller Signal Strength
[03] Flight Mode (N: Normal, C: Cruise, S: Sport)
[04] Aircraft Battery Level
[05] GPS Satellites Number
[06] Ascent/Descent Speed (V.S)
[07] Horizontal Speed (H.S)
[08] Remaining Flight Time
[09] Altitude Above Ground (AGL)
[10] Horizontal Distance from Home Point
[11] Relative Altitude (from Home Point)

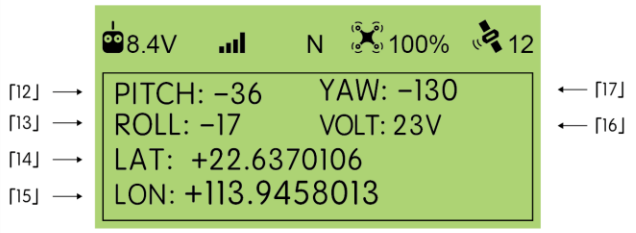

[12] Pitch Angle
[13] Roll Angle
[14] Latitude (LAT)
[15] Longitude (LON)
[16] Aircraft Battery Voltage
[17] Yaw Angle

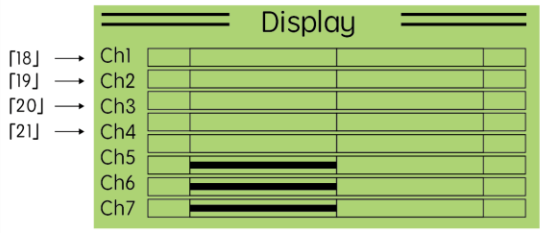

[18] Ch1 (Roll) Channel Value
[19] Ch2 (Pitch) Channel Value
[20] Ch3 (Throttle) Channel Value
[21] Ch4 (Yaw) Channel Value

Note on Channel Calibration:

If any bar values are displayed for Ch1-Ch4 on this page while the remote controller is not being operated, calibration of the remote controller's sticks is required. You can calibrate the stick values by adjusting the trim buttons on the remote controller until the centered values for Ch1-Ch4 are displayed.

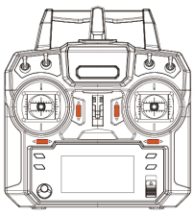

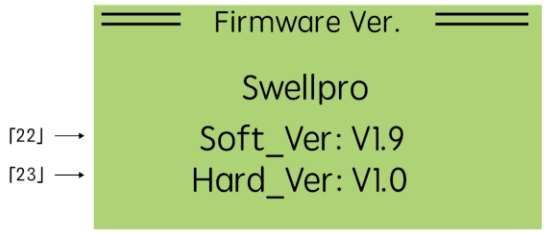

[22] Remote Controller Firmware Version
[23] Remote Controller Hardware Version

Copyright ©2026 SwellPro All Rights Reserved

5.4 Basic Flight

5.4.1 Starting and Stopping the Motors (Arming)

Starting (Arming) Motors

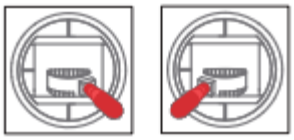

Pull both the left and right control sticks simultaneously down and inwards and maintain this position for 3 seconds. The motors will be unlocked and start rotating.

💡 The motor can be unlocked and started only after the drone has completed the GPS star search and positioning successfully.

Stopping Motors

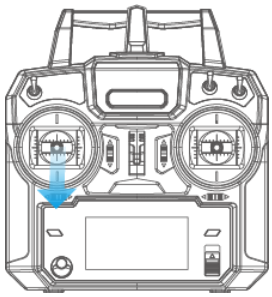

Method 1: After the aircraft has landed, pull the left stick down and hold for 3 seconds. The motor would stop rotating and lock.

💡 This method is recommended.



Method 2: After the aircraft has landed, pull both the left and the right control sticks down and outward.

Stopping Motors Mid-flight

Stopping motors mid-flight will cause the aircraft to crash. Stopping aircraft motors while flying should be done only in an emergency when doing so will minimize potential damage. For example, when the aircraft is out of control, there is a risk that it may hit people in the vicinity. To stop motors mid-flight, pull both the left and the right control sticks down and outward (Stopping Motors - Method 2).

5.4.2 Control the Aircraft

The left control stick controls Throttle & Yaw; the right control stick controls Pitch & Roll.

- Left Stick: Controls vertical ascent/descent (up/down input) and aircraft yaw (left/right input).

Copyright ©2026 SwellPro All Rights Reserved

- Right Stick: Controls forward/backward flight (up/down input) and lateral left/right flight (left/right input).

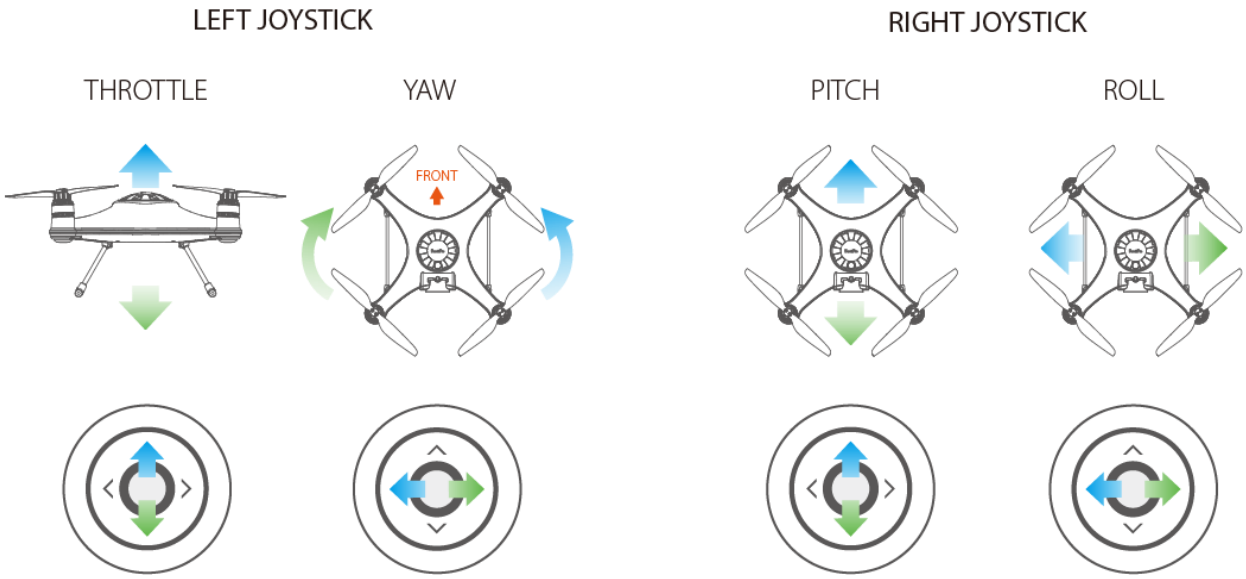

5.4.3 Takeoff and Landing

5.4.3.1 Takeoff

1. Place the aircraft on a flat, open, and unobstructed surface.
2. Complete all the pre-flight checklist items.
3. Power on the remote controller, followed by the aircraft.
4. Start motors.
5. Gently push the left (throttle) control stick up slowly, allowing the aircraft to take off smoothly. Release the throttle when the aircraft is approximately 1.5 m high. Allow the aircraft to hover for a moment to ensure flight stability.

5.4.3.2 Landing

1. Check the condition for a safe landing.
2. Gently pull the left (throttle) control stick down, allowing the aircraft to descend and land on a flat surface.
3. After landing, keep the left (throttle) control stick down for 3 seconds until the motors top.

5.5 Advanced Flight

5.5.1 PowerFlip

⚠ **If the aircraft turn over the water**, ensure to use PowerFlip to turn the aircraft to the upright position as soon as possible to prevent the risk of the barometric membrane getting damaged.

 Copyright ©2026 SwellPro All Rights Reserved

⚠ **If the aircraft turn over on the water,** the PowerFlip feature enables the aircraft to flip back to its upright position.

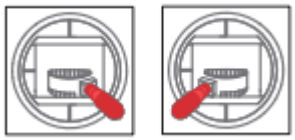

When the aircraft floats upside-down on the water, pull both the left and right joysticks simultaneously down and inwards and maintain the control until the aircraft flips over to its upright position.

💡 When operating the PowerFlip, the remote controller will prompt " Initiate Power-Flip ". When the aircraft flips, the remote controller will prompt " Power-Flip Succeed ". At this time, unlock the motor again and you can control the aircraft to take off from the water.

5.5.2 Water Takeoff and Landing

⚠ Before landing on the water, watch out the water area for weeds or other debris to prevent the landing gear, attached accessories, and payload from getting tangled by them, which can cause the aircraft not able to take off.

Water Takeoff: Ascend quickly from the surface to prevent the aircraft from being affected by a passing wave.

Water Landing: Descend vertically to the surface, otherwise, it may flip and turn over. The flight controller will shut down the motors if the aircraft becomes inverted on the water.

5.5.3 Boat Takeoff and Landing

When takeoff or landing on the boat/kayak, **PAY EXTRA ATTENTION** to the operation, as it can be very difficult and dangerous to operate the aircraft in this environment.

⚠
- There should be enough space for the aircraft to take off or land on the boat.
- If there is not enough space on the boat, taking off and landing on the water can otherwise be a safer, alternative option, as there is sufficient space for the aircraft to operate.
- Always be aware of the direction of the wind relative to the boat for take-off or landing. Stand in the upwind position relative to the aircraft to prevent the aircraft from drifting toward you when take-off or landing in windy conditions.
- For your safety, it is not recommended to launch or land the Fisherman FD1S on your hands.
- After initiating return-to-home on the boat, always regain control and land manually when the aircraft is approaching the boat or there are obstacles.

Copyright ©2026 SwellPro All Rights Reserved

5.6 Pairing

The remote controller and aircraft are pre-paired at the factory and typically require no additional pairing. If a connection cannot be established, perform the following pairing procedure:

Pairing Procedure

1. Locate the Pairing Button next to the USB port on the bottom of the aircraft. Press and hold the aircraft's Pairing Button, then simultaneously turn on the aircraft's power. The aircraft will enter pairing mode.
2. Press and hold the remote controller's Pairing Button, then turn on the remote controller's power. The remote controller will enter pairing mode.
3. The remote controller and aircraft will automatically complete the pairing process.
4. Observe the aircraft's status indicator: alternating red and green flashes indicate successful pairing. The remote controller's signal strength display will return to normal, confirming the system is ready for operation.

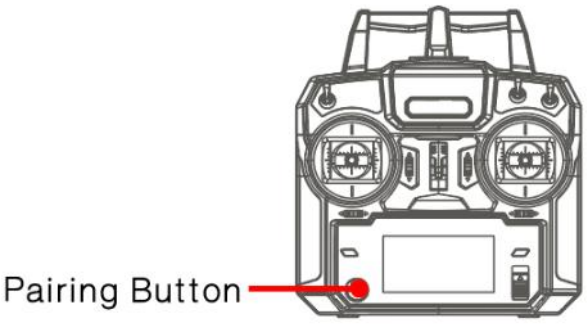

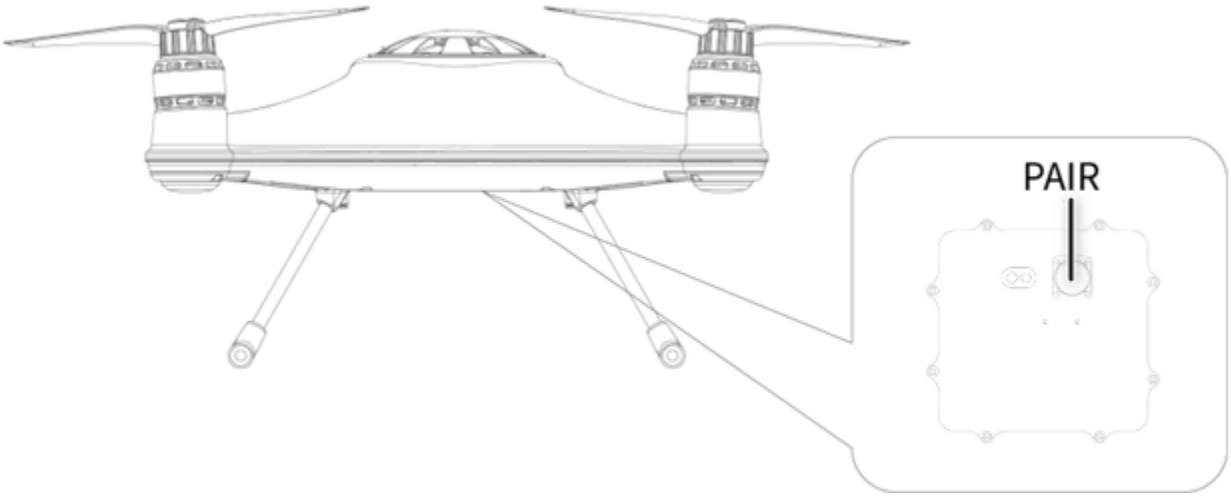

Copyright ©2026 SwellPro All Rights Reserved

6 Payload Release

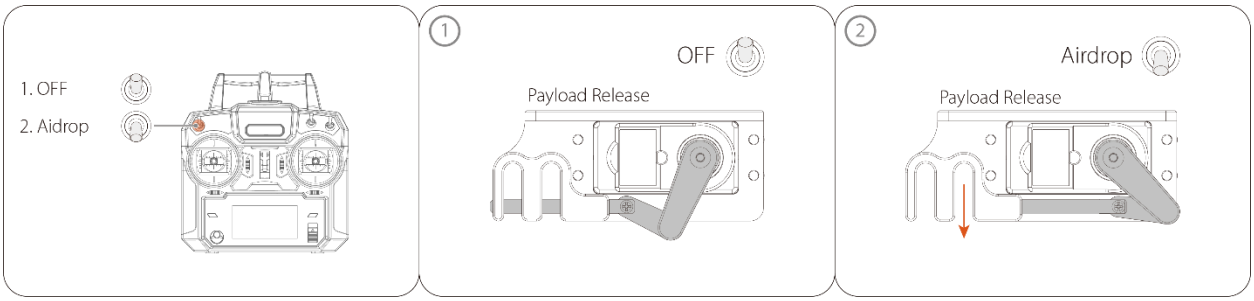

⚠ To ensure safety, always mount the payload onto the dispenser only when the aircraft has landed and its motors are locked. It is strictly prohibited to perform any mounting operations while the aircraft is hovering or in flight.

Copyright ©2026 SwellPro All Rights Reserved

7 Appendix

7.1 Specification

Aircraft	
IP Rating:	IP67
Weight:	1391g (Without battery); 2365g(With Battery and propellers)
Size (W/O Propeller):	628*628*218mm (With propellers) 372*372*202mm (Without propellers)
Max Ascent Speed:	3m/s
Max Descent Speed:	3m/s
Max Flight Speed:	Normal:10m/s; Sport:18m/s(Without payload)
Max Tilt Angle:	30°
Max Altitude From Takeoff Point:	120m default
Max Flight Distance:	1300m[1]
Max Image Transmission Distance:	1300m[2]
Max Payload Capacity:	2200g(4.8lb)
Max Wind Speed Resistance:	18m/s
Max Flight Time(Hovering):	29 mins (no wind & no load)
Hovering Precision:	±0.5m
Working Temperature：	-10°C~40°C
Satellite Positioning Systems：	GPS + Galileo + BeiDou

[1] [2] **Measured in an open environment, without interference. It does not reflect the actual distance. Use as reference during the flight.**

Copyright ©2026 SwellPro All Rights Reserved

Remote Controller	
Size:	174*89*190mm
Waterproof Specifications	Non-waterproof
Weight:	378g(Without battery)
Operating Frequency:	2.402-2.478GHM
Bandwidth:	500KHz
Modulation Type:	GFSK
Sensitivity:	-92dB
Transmitter Power:	< 20dB
Battery:	6V (1.5V AA*4)
Channel:	6

Intelligent battery(IB4+)	
Voltage:	22.2V
Nominal Capacity:	4500mAh
Type:	Intelligent 6S
Watt Hours:	99.9Wh
Size:	154.8*80*49.5mm
Weight:	820g
Working Temperature:	-10°C - 60°C (discharge); 0°C - 45°C (charge)
Storage Temperature:	0℃ - 25℃
Charging Time:	100mins
Max Charging Current:	7.7A

Charger	
Input	220V, 50/60Hz
Output:	22.2V

Copyright ©2026 SwellPro All Rights Reserved

Maximum Output Power:	150W
Dimension	143*100*60mm
Working temperature	0° C~ 60° C
Storage temperature	0° C~ 60° C
Dual Payload Release	
Waterproof Rating:	IP67
Max Payload Capacity:	2200g
Size:	75*50*37.5 mm
Weight:	100g

7.2 Battery Care and Maintenance

- Strictly prohibit the battery from contacting any liquid, including but not limited to water, beverages, or oils.
- Do not immerse the battery in water or allow it to become wet.
- Never use the battery in rain or damp environments. Internal contact with moisture may cause decomposition, leading to spontaneous combustion or explosion.
- Strictly prohibit the use of swollen, leaking, or damaged batteries. Dispose of any battery exhibiting these conditions properly according to the disposal method outlined in this document.
- The operating ambient temperature range for the battery is -10°C to 40°C. Usage in environments exceeding 60°C may cause fire or explosion. Usage below -10°C may cause permanent damage.
- Disassembling or piercing the battery in any way is forbidden, as this may cause fire or explosion.
- The internal electrolyte is highly corrosive. In case of leakage, keep clear. If electrolyte contacts skin or eyes, flush immediately with clean water for 15 minutes and seek immediate medical attention.
- If the battery is accidentally submerged, retrieve it immediately and place it in a safe, open area. Keep away from the battery until it is completely dry. Do not reuse a dried battery. Dispose of it according to the specified method in this document.

Copyright ©2026 SwellPro All Rights Reserved

- In case of battery fire, use a Class D fire extinguishing agent, such as sand, a fire blanket, dry powder, or a CO_2 extinguisher.
- Do not place the battery in a microwave, pressure cooker, or any equipment that may generate high temperatures or pressure.
- Do not place the battery on conductive surfaces, such as metal tables.
- Never short-circuit the battery's positive and negative terminals with wires or any other metal objects.
- Avoid dropping or subjecting the battery to impact.
- Do not place heavy objects on the battery or charger.
- If the battery connector is soiled, wipe it clean with a dry cloth. Contamination can cause poor contact, leading to operational failure or charger damage.
- Upon triggering the Level 1 Low Battery warning, execute a safe Return-to-Home procedure immediately. Continued flight after the Level 2 Low Battery warning is triggered may severely damage the battery. Proceed with extreme caution.

7.2.1 Battery Charging

- The aircraft battery must be charged only with the designated charger provided by SwellPro. SwellPro shall not be held liable for any consequences resulting from the use of unauthorized chargers.
- The charging process must be supervised at all times to monitor the status and prevent potential incidents.
- During charging, place the battery and charger on a non-combustible surface, such as concrete, and ensure the surrounding area is clear of flammable materials.
- Disconnect the battery from the charger once charging is complete. Disconnect the charger from the power source when not in use.
- Never clean the charger using alcohol or other flammable solvents.
- The battery will be hot after use. Always wait for it to cool to the ambient charging temperature (0°C to 40°C / 32°F to 104°F) before connecting the charger.
- Do not use a charger that shows any signs of damage.
- Do not charge the battery in any potentially explosive atmosphere, including fueling areas, or areas containing chemicals or particulates (such as dust or metal powders).

7.2.2 Precautions for low-temperature use

- When the battery is used in a low-temperature environment (-10°C to 5°C), the battery capacity and flight time will be drastically reduced. It is recommended to take off when the battery is fully charged. Please fully charge and keep the battery warm before use.

Copyright ©2026 SwellPro All Rights Reserved

- In a low-temperature environment, it is recommended to preheat the battery to above 5°C before flying, and it is better to preheat it to above 25°C.
- Before flying in a cold environment, insert the battery into the aircraft to warm up for 1 to 2 minutes, and take off after the battery is fully warmed up.
- In low-temperature environments, battery output power will be reduced, which diminishes the aircraft's wind resistance. Please fly with caution.
- Be aware that aircraft performance is reduced when operating at high altitudes and in low temperatures. Always fly with extreme caution under these conditions.

7.2.3 Battery Storage and Transportation

- The aircraft battery must be charged only with the designated charger provided by Swell Pro. Swell Pro shall not be held liable for any consequences resulting from the use of unauthorized chargers.
- The charging process must be supervised at all times to monitor the status and prevent potential incidents.
- During charging, place the battery and charger on a non-combustible surface, such as concrete, and ensure the surrounding area is clear of flammable materials.
- Disconnect the battery from the charger once charging is complete. Disconnect the charger from the power source when not in use.
- Never clean the charger using alcohol or other flammable solvents.
- Do not use a charger that shows any signs of damage.
- Do not charge the battery in any potentially explosive atmosphere, including fueling areas, or areas containing chemicals or particulates (such as dust or metal powders).

7.2.4 Battery Disposal

- Dispose of the battery in specific recycling boxes only after a complete discharge.
- DO NOT place the battery in regular trash containers. Strictly follow your local regulations regarding the disposal and recycling of batteries.

7.3 Inspection

7.3.1 Fuselage

- Check the exterior, especially for the gaps and screws.
- Make sure that the arm and landing gear are not damaged.
- Make sure the battery cover is tightly sealed to prevent the battery from falling off or water from getting in during the flight.

 Copyright ©2026 SwellPro All Rights Reserved

- Make sure that all connectors at the bottom of the aircraft are tightly sealed to prevent falling off or water getting in during the flight.
- Keep the fuselage and battery sealing clean and dust-free. Sand or other mid-size particles might affect proper waterproof sealing.
- Make sure that the sealings have no defects or breaks. If required, light lubricant (Vaseline or silicone oil) can be applied to the sealing ring area.

7.3.2 Battery

- Check the exterior of the battery. If the battery is swollen, leaked, or cracked, replace the battery, and dispose of the damaged battery properly in a proper battery disposal manner.
- Make sure the battery does not move or come off after installation.
- Before each flight, fully charge the battery.
- During the flight, make sure the battery level is sufficient to complete the flight.
- Make sure that the battery plug is not bent, cracked, or blocked.
- Make sure the battery connector is clean. If the pins appear to be oxidated (look greenish or rusty), replace the battery.

7.3.3 Motor

- Check the exterior of the motor to see if there are any damages.
- Rotate the motor to check if there is any obvious resistance to turning the motor.
- Start the motor without installing the propeller, and check if there are any abnormal noises.
- Make sure that the motor and the arm screws are securely installed.
- Check the motor gap for any salt or other residuals. Rinse and clean thoroughly with water.
- Check the propeller mount on the motor to see if it is loosened or damaged. Fasten the screws if the propeller mount is loosened. Replace the propeller mount if it is damaged.

7.3.4 Propeller

- Check the exterior of the propeller. If there are breakages, cracks, or creases, replace the propeller.
- Be aware of the A/B mark both on the propellers and the motors and make sure that the propellers are installed correctly accordingly.
- Check the symmetry of the propellers. Start the motor and observe the propeller's rotation. If the propellers on the diagonal sides rotate in a different direction and are accompanied by severe vibrations, replace the propellers.

Copyright ©2026 SwellPro All Rights Reserved

7.4 Maintenance And Store

7.4.1 Daily Maintenance

- After flying the aircraft out to the ocean, please rinse the aircraft with clean fresh water right away, especially for the motor to prevent the formation of salt and other residuals.
- If salt and other residuals are being observed, soak the part in clean freshwater thoroughly (under 20mins) and clear out the residuals.
- If the aircraft is wet, wipe away the water before you open it and take off the battery to avoid water dripping into the battery compartment.
- Keep the aircraft clean, especially the lens. Recommend using a soft cloth and fresh water to clean the aircraft. Do not use any corrosive cleaning solution.
- Keep water, dust, or other particles from entering the aircraft.
- Avoid prolonged exposure to the sun.
- When not in use for a long period, store the aircraft in a cool, dry, and ventilated environment, best at a temperature between 20°C - 28°C, and humidity between 40%-60%.

7.4.2 Store and Transport

- Before putting the aircraft into storage, turn off the power, take off the battery, and clean the aircraft.
- Store all the aircraft parts and accessories together.
- Store the aircraft in a dry, ventilated, cool temperature (20°C - 28°C).
- If the flight battery is not being used for a long period, ensure to set the battery to store voltage (22.8V~23.2V). To prevent the battery from over-discharge, charge the flight battery to store voltage every 3 months.
- If the remote controller is not being used for a long period, ensure to fully charge the remote controller (battery level on the top right of the screen) for storage. To prevent the battery from over-discharge, fully recharge the remote controller every 3 months.
- **Do not leave both the flight battery and remote controller battery unattended for a long period (longer than 3 months).** As the battery discharges over time, long storage time without recharge would result in battery over-discharge and permanent damage to the battery.

Copyright ©2026 SwellPro All Rights Reserved

7.5 FCC Caution

This device complies with part 15 of the FCC Rules. Operation is subject to the following two conditions:(1) This device may not cause harmful interference, and (2) this device must accept any interference received, including interference that may cause undesired operation.

Any Changes or modifications not expressly approved by the party responsible for compliance could void the user's authority to operate the equipment.

Note: This equipment has been tested and found to comply with the limits for a Class B digital device, pursuant to part 15 of the FCC Rules. These limits are designed to provide reasonable protection against harmful interference in a residential installation.

This equipment generates uses and can radiate radio frequency energy and, if not installed and used in accordance with the instructions, may cause harmful interference to radio communications. However, there is no guarantee that interference will not occur in a particular installation. If this equipment does cause harmful interference to radio or television reception, which can be determined by turning the equipment off and on, the user is encouraged to try to correct the interference by one or more of the following measures:

-Reorient or relocate the receiving antenna.

-Increase the separation between the equipment and receiver.

-Connect the equipment into an outlet on a circuit different from that to which the receiver is connected.

-Consult the dealer or an experienced radio/TV technician for help.

This equipment complies with FCC radiation exposure limits set forth for an uncontrolled environment. This equipment should be installed and operated with minimum distance 20cm between the radiator your body.

7.6 Version Information

SwellPro products are constantly improving, as the product user guides. It is recommended to visit www.swellpro.com to check and download the latest user guide.

Version

1.0.0 Fisherman FD1S User Manual 1.0 Edition

1.0.1 Changed sport mode descriptions, compass calibration, and added payload release control warnings.

Copyright ©2026 SwellPro All Rights Reserved